Do Not Sell F3
C. 292 2,3.20

TM 11-278

WAR DEPARTMENT TECHNICAL MANUAL

T-3

RADIO TELETYPE EQUIPMENT AN/TRA-7

WAR DEPARTMENT *OCTOBER 1946*

WAR DEPARTMENT TECHNICAL MANUAL

TM 11-278

This manual supersedes TM 11-278, 19 July 1945

RADIO TELETYPE EQUIPMENT AN/TRA-7

WAR DEPARTMENT • OCTOBER 1946

United States Government Printing Office

Washington: 1946

WAR DEPARTMENT

Washington 25, D. C., 23 October 1946

TM 11-278, Radio Teletype Equipment AN/TRA-7, is published for the information and guidance of all concerned.

[AG 300.7 (3 Jan 46)]

BY ORDER OF THE SECRETARY OF WAR:

OFFICIAL:
EDWARD F. WITSELL
Major General
The Adjutant General

DWIGHT D. EISENHOWER
Chief of Staff

DISTRIBUTION:
AAF (5); AGF (5); T (5); Dept (2); Base Comd (2); Arm & Sv Bd (1); Tech Sv (2); AMA (2); Dep 11 (2); Lab 11 (2); 4th & 5th Ech Maint Shops 11 (2); A (ZI) (2); Two (2) copies to each of the following T/O & E's: 1-1037; 11-107; 11-127; 11-587; 11-592; 11-597

For explanation of distribution formula, see FM 21-6.

CONTENTS

		Paragraph	Page
PART ONE.	**INTRODUCTION.**		
Section I.	Description.		
	General	1	1
	Simplified block diagram	2	1
	Technical characteristics	3	3
	Table of components	4	3
	Packaging data	5	3
	Description of major components	6	3
	Installation.		
	Siting	7	6
	Uncrating, unpacking, and checking	8	7
	Connections and interconnections	9	7
	Transmitting shelter connections	10	7
	Receiving shelter connections	11	7
	Operating shelter connections	12	10
	Interconnections between shelters	13	12
PART TWO.	**OPERATING INSTRUCTIONS.**		
Section III.	Controls and their use.		
	Frequency Shift Exciter O–39/TRA–7	14	14
	Dual Diversity Converter CV–31/TRA–7	15	15
	Control Unit C–292/TRA–7	16	20
IV.	Initial adjustment of Radio Teletype Equipment AN/TRA–7.		
	General	17	22
	Starting procedure, transmitting equipment	18	22
	Initial adjustment of frequency shift exciter	19	23
	Starting procedure, receiving equipment	20	24
	Converter output circuit adjustments	21	24
	Adjustment of input to converter	22	25
	Starting procedure, operating equipment	23	25
	Control unit initial adjustment	24	26
V.	Final adjustment and operation.		
	General	25	26
	Final adjustment of transmitting shelter	26	27
	Final adjustment at receiving shelter	27	27
	Tuning to distant transmitter frequency	28	27
	Tuning check during normal transmission	29	28
	Adjustment of output control circuit	30	29
	Carrier-control mark-hold feature	31	29
	Procedures when circuit is in use	32	30
	Final check at operating shelter	33	30
	System receiving and transmitting tests	34	30
	Emergency operation	35	31
	Connection to telegraph equipment, external to operating shelter	36	32
VI.	Equipment performance check list.		
	Purpose and use of check list	37	33
	Equipment performance check list	38	34
PART THREE.	**MAINTENANCE INSTRUCTIONS.**		
Section VII.	Preventive maintenance techniques.		
	Meaning of preventive maintenance	39	39
	Description of preventive maintenance techniques	40	39
	Vacuum tubes	41	40
	Capacitors	42	41
	Inductors	43	41
	Resistors	44	41

		Paragraph	Page
	Fuses	45	41
	Relays	46	42
	Switches	47	43
	Coils	48	43
	Rheostats and potentiometers	49	43
	Terminal blocks	50	44
	Multiple connectors	51	44
	Cords and cables	52	44
	Meters	53	44
	Pilot lamps	54	44
	Jacks and plugs	55	45
	Cabinets, chassis, and mountings	56	45
	Coupling shafts and control knobs	57	45
	Power transformers and filter chokes	58	45
VIII.	Itemized preventive maintenance.		
	Introduction	59	46
	Preventive maintenance tools and materials	60	46
	Item 1. Cords and cables	61	46
	Item 2. Dual Diversity Converter CV–31/TRA–7	62	46
	Item 3. Control Unit C–292/TRA–7	63	46
	Item 4. Frequency Shift Exciter O–39/TRA–7	64	47
	Preventive maintenance check list	65	47
IX.	Lubrication.		
	Approved lubricants	66	47
	Lubrication instructions	67	47
	Higher echelon lubrication	68	48
X.	Moistureproofing and fungiproofing.		
	Moistureproofing and fungiproofing	69	48
PART FOUR.	**AUXILIARY EQUIPMENT.** (Not used).		
PART FIVE.	**REPAIR INSTRUCTIONS.**		
Section XI.	Theory of equipment.		
	Simplified block diagram	70	51
XII.	Theory of frequency shift exciter.		
	General	71	52
	Oscillator circuit	72	52
	Amplifier circuit	73	53
	Keying control circuit	74	54
	Monitoring circuit	75	54
	Power supply	76	55
XIII.	Theory of dual diversity converter.		
	General	77	56
	Input circuit	78	56
	Limited amplifier	79	60
	Linear discriminator	80	61
	Driver circuit	81	63
	Frequency drift compensator circuit	82	64
	Carrier-control mark-hold circuit	83	69
	D-c output circuit	84	69
	Tone oscillator and radio receiver disabling circuit	85	70
	Power supply circuit	86	72
XIV.	Theory of control unit.		
	General	87	74
	Receiving circuit	88	75
	Sending circuit	89	76
	Extension circuits	90	77
	Emergency operation, c-w keying	91	79
	Emergency frequency-shift operation	92	82
	Power supply	93	85
XV.	Trouble shooting.		
	General trouble-shooting information	94	87

		Paragraph	Page
	Frequency shift exciter, trouble-shooting chart	95	85
	Voltage measurements, frequency shift exciter	96	89
	Resistance measurements, frequency shift exciter	97	89
	Dual diversity converter, trouble-shooting chart	98	95
	Voltage measurements, dual diversity converter	99	97
	Resistance measurements, dual diversity converter	100	104
	Control unit, trouble-shooting chart	101	105
	Voltage measurements, control unit	102	111
	Resistance measurements, control unit	103	113
	Wiring diagrams	104	116
XVI.	Repairs.		
	Replacement of parts	105	116
	Special tools	106	117
	Unsatisfactory Equipment Report	107	117
XVII.	Alignment and adjustment.		
	Frequency shift exciter, higher echelon tests and alignment	108	117
	Dual diversity converter, internal alignment of input circuit	109	120
	Dual diversity converter, internal alignment of output circuit	110	122
	Dual diversity converter, higher echelon tests and alignment	111	123
	Control unit, higher echelon tests and alignment	112	126
	Adjustment of relays K101 and K401	113	128
APPENDIX I.	**REFERENCES**		132
II.	**MAINTENANCE PARTS FOR RADIO TELETYPE EQUIPMENT AN/TRA-7**		137

WARNING

HIGH VOLTAGE

is used in the operation
of this equipment.

DEATH ON CONTACT

may result if operating personnel
fail to observe safety precautions.

DESTRUCTION NOTICE

WHY—To prevent the enemy from using or salvaging this equipment for his benefit.

WHEN—When ordered by your commander.

HOW—1. Smash—Use sledges, axes, handaxes, pickaxes, hammers, crowbars, heavy tools.
2. Cut—Use axes, handaxes, machetes.
3. Burn—Use gasoline, kerosene, oil, flame throwers, incendiary, grenades.
4. Explosives—Use firearms, grenades, TNT.
5. Disposal—Bury in slit trenches, fox holes, other holes. Throw in streams. Scatter.

USE ANYTHING IMMEDIATELY AVAILABLE FOR DESTRUCTION OF THIS EQUIPMENT

WHAT—1. Smash—All vacuum tubes, control dials, transformers, power supplies, insulators, and cable connectors.
2. Cut—All connecting wires, cording, and cabling.
3. Burn—All equipment and all associated field, technical, and installation manuals.
4. Bend—All shafts and cases.
5. Bury or scatter—All remains, after destroying their usefulness.

DESTROY EVERYTHING

First Aid for Electric Shock

RESCUE.

In case of electric shock, shut off the high voltage at once and ground the circuits. If the high voltage cannot be turned off without delay, free the victim from contact with the live conductor as promptly as possible. Avoid direct contact with either the live conductor or the victim's body. Use a dry board, dry clothing, or other nonconductor to free the victim. An ax may be used to cut the high-voltage wire. Use extreme caution to avoid the resulting electric flash.

SYMPTOMS.

a. Breathing stops abruptly in electric shock if the current passes through the breathing center at the base of the brain. If the shock has not been too severe, the breath center recovers after a while and normal breathing is resumed, provided that a sufficient supply of air has been furnished meanwhile by artificial respiration.

b. The victim is usually very white or blue. The pulse is very weak or entirely absent and unconsciousness is complete. Burns are usually present. The victim's body may become rigid or stiff in a very few minutes. This condition is due to the action of electricity and is not to be considered rigor mortis. Artificial respiration must still be given, as several such cases are reported to have recovered. The ordinary and general tests for death should never be accepted.

TREATMENT.

a. Start artificial respiration immediately. At the same time send for a medical officer, if assistance is available. Do not leave the victim unattended. Perform artificial respiration at the scene of the accident, unless the victim's or operator's life is endangered from such action. *In this case only,* remove the victim to another location, but no farther than is necessary for safety. If the new location is more than a few feet away, artificial respiration should be given while the victim is being moved. If the method of transportation prohibits the use of the Shaeffer prone pressure method, other methods of resuscitation may be used. Pressure may be exerted on the front of the victim's diaphragm, or the direct mouth-to-mouth method may be used. Artificial respiration, once started, must be continued, without loss of rhythm.

b. Lay the victim in a prone position, one arm extended directly overhead, and the other arm bent at the elbow so that the back of the hand supports the head. The face should be turned away from the bent elbow so that the nose and mouth are free for breathing.

c. Open the victim's mouth and remove any foreign bodies, such as false teeth, chewing gum, or tobacco. The mouth should remain open, with the tongue extended. Do not permit the victim to draw his tongue back into his mouth or throat.

d. If an assistant is available during resuscitation, he should loosen any tight clothing to permit free circulation of blood and to prevent restriction of breathing. He should see that the victim is kept warm, by applying blankets or other covering, or by applying hot rocks or bricks wrapped in cloth or paper to prevent injury to the victim. The assistant should also be ever watchful to see that the victim does not swallow his tongue. He should continually wipe from the victim's mouth any frothy mucus or saliva that may collect and interfere with respiration.

e. The resuscitating operator should straddle the victim's thighs, or one leg, in such manner that:

(*1*) the operator's arms and thighs will be vertical while applying pressure on the small of the victim's back;

(*2*) the operator's fingers are in a natural position on the victim's back with the little finger lying on the last rib;

(*3*) the heels of the hands rest on either side of the spine as far apart as convenient without allowing the hands to slip off the victim;

(*4*) the operator's elbows are straight and locked.

f. The resuscitation procedure is as follows:

(*1*) Exert downward pressure, not exceeding 60 pounds, for 1 second.

(*2*) Swing back, suddenly releasing pressure, and sit on the heels.

(*3*) After 2 seconds rest, swing forward again, positioning the hands exactly as before, and apply pressure for another second.

g. The forward swing, positioning of the hands, and the downward pressure should be accomplished in one continuous motion, which requires 1 second. The release and backward swing require 1 second. The addition of the 2-second rest makes a total of 4

TL15338-D

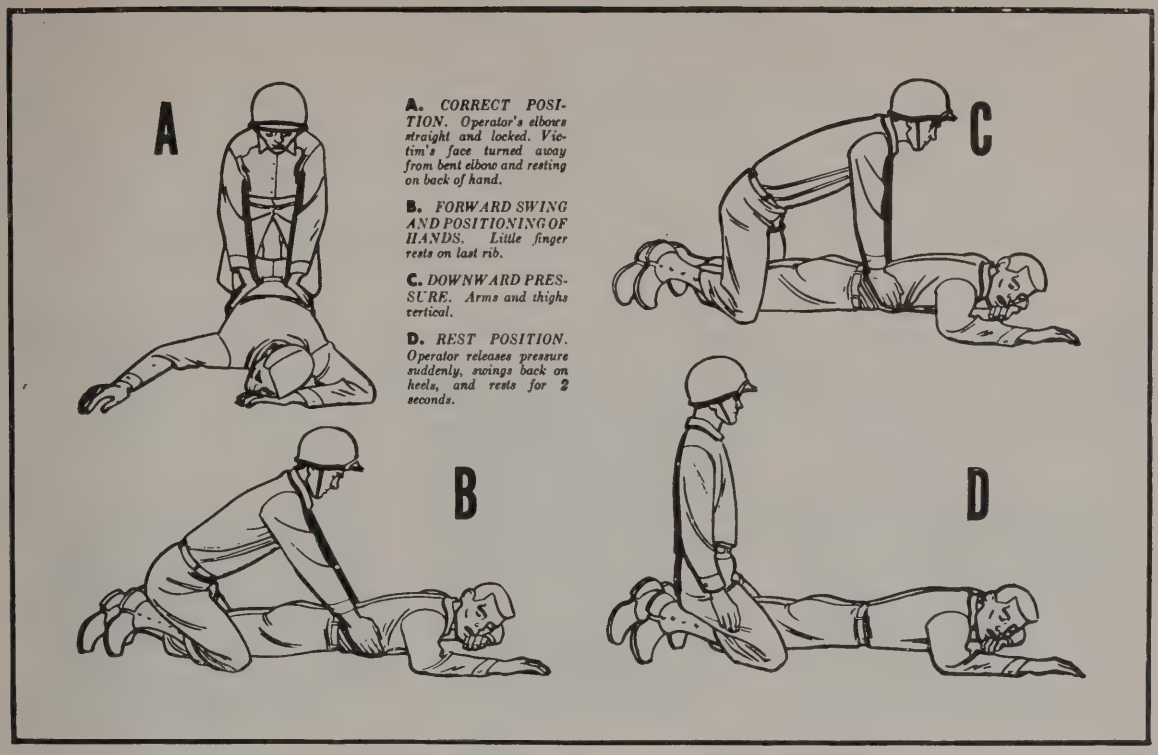

seconds for a complete cycle. Until the operator is thoroughly familiar with the correct cadence of the cycle, he should count the seconds aloud, speaking distinctly and counting evenly in thousands. Example: one thousand and one, one thousand and two, etc.

h. Artificial respiration should be continued until the victim regains normal breathing or is pronounced dead by a medical officer. Since it may be necessary to continue resuscitation for several hours, relief operators should be used if available.

RELIEVING OPERATOR.

The relief operator kneels beside the operator and follows him through several complete cycles. When the relief operator is sure he has the correct rhythm, he places his hands on the operator's hands without applying pressure. This indicates that he is ready to take over. On the backward swing, the operator moves and the relief operator takes his position. The relieved operator follows through several complete cycles to be sure that the new operator has the correct rhythm. He remains alert to take over instantly if the new operator falters or hesitates on the cycle.

STIMULANTS.

a. If an inhalant stimulant is used, such as aromatic spirits of ammonia, the individual administering the stimulant should first test it himself to see how close he can hold the inhalant to his own nostril for comfortable breathing. Be sure that the inhalant is not held any closer to the victim's nostrils, and then for only 1 or 2 seconds every minute.

b. After the victim has regained consciousness, he may be given hot coffee, hot tea, or a glass of water containing ½ teaspoon of aromatic spirits of ammonia. *Do not give any liquids to an unconscious victim.*

CAUTIONS.

a. After the victim revives, keep him LYING QUIETLY. Any injury a person may have received may cause a condition of shock. Shock is present if the victim is pale and has a cold sweat, his pulse is weak and rapid, and his breathing is short and gasping.

b. Keep the victim lying flat on his back, with his head lower than the rest of his body and his hips elevated. Be sure that there is no tight clothing to restrict the free circulation of blood or hinder natural breathing. Keep him warm and quiet.

c. A resuscitated victim must be watched carefully as he may suddenly stop breathing. *Never leave a resuscitated person alone until it is CERTAIN that he is fully conscious and breathing normally.*

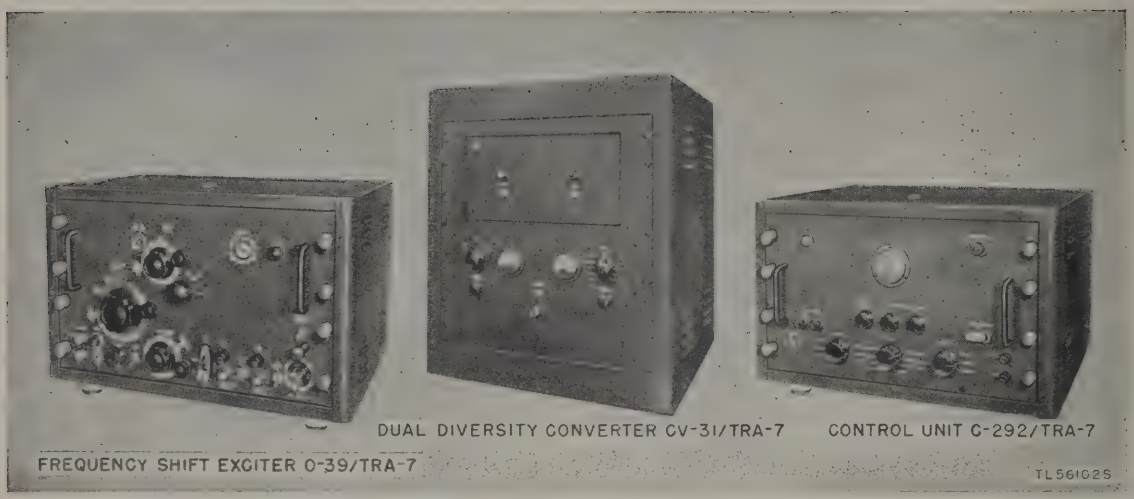

Figure 1. Radio Teletype Equipment AN/TRA-7.

PART ONE
INTRODUCTION

Section I. DESCRIPTION

1. General

a. Radio Teletype Equipment AN/TRA–7 consists of three units: Frequency Shift Exciter O–39/TRA–7, Dual Diversity Converter CV–31/TRA–7, and Control Unit C–292/TRA–7. (See fig. 1.) The equipment is designed to provide two-way teletypewriter service over a long-range radio link when used with the proper radio transmitting and receiving components. In conjunction with a modified Radio Set SCR–399–( ), Radio Teletype Equipment AN/TRA–7 and other radio teletype equipment housed in three Shelters HO–17–( ) comprise a high-powered, mobile, radioteletype station known as "Radio Set AN/MRC–2." This equipment is designed for full-duplex, half-duplex, or one-way reversible teletypewriter operation.

b. Complete information on Radio Teletype Equipment AN/TRA–7, when used with Radio Set AN/MRC–2, is given in TM 11–624 which should be used as a reference during operation of the radio set. If Radio Teletype Equipment AN/TRA–7 is used as part of a radio set other than Radio Set AN/MRC–2, see the Technical Manual on that set for interconnections and any differences in operating procedures that may be required. If such a Technical Manual is not available, the necessary connections, equipment modifications, and procedures may be devised from a study of the figures and instructions in this manual.

2. Simplified Block Diagram

a. Figure 2 is a simple block diagram showing the relationship between the three units of Radio Teletype Equipment AN/TRA–7. The diagram shows the three shelters at a radio terminal: the receiving shelter in which the dual diversity converter is located; the transmitting shelter in which the frequency shift exciter is located; and the operating shelter in which the control unit is located. The two receiving antennas associated with the receiving shelter are usually spaced several wavelengths apart to provide for space diversity operation, thereby reducing the effects of selective fading. The radio frequencies used are from 2 to 18 megacycles.

b. The frequency shift exciter, associated with the transmitting equipment, is arranged to enable the radio transmitter to send out its normal frequency when the contacts of the teletypewriter sending mechanism are closed (marking condition). When the contacts are opened (spacing condition) the radio frequency is reduced by 850 cycles, the amplitude remaining unchanged. At the receiving end of the radio system these marking and spacing signals are converted in the dual diversity converter located with the receiving equipment, into polar and neutral teletype signals. The polar signals are transmitted to the control unit associated with the operating equipment, where they are converted into direct-current (d-c) telegraph signals to actuate the teletypewriter equipment. The neutral signals are used to operate a monitoring teletypewriter associated with the receiving equipment.

c. The operating shelter for Radio Set AN/MRC–2 may be located at a maximum distance of 10 miles from either the receiving or transmitting shelters using field wire for the interconnecting, signaling, and control leads. The teletypewriter equipment will normally be located in the operating shelter. If conditions require that the circuit be extended from the operating shelter, an additional Reperforator Teletypewriter Set TC–16, if available, should be used for tape transmission in both directions on the extension circuit. This assures that high-quality signals are transmitted from the operating shelter to both the distant radio terminal and the extension circuit and prevents the distortion in the extension circuit from decreasing the operating margin of the system. Direct connection to extension circuits should not be used on both ends of the radio system.

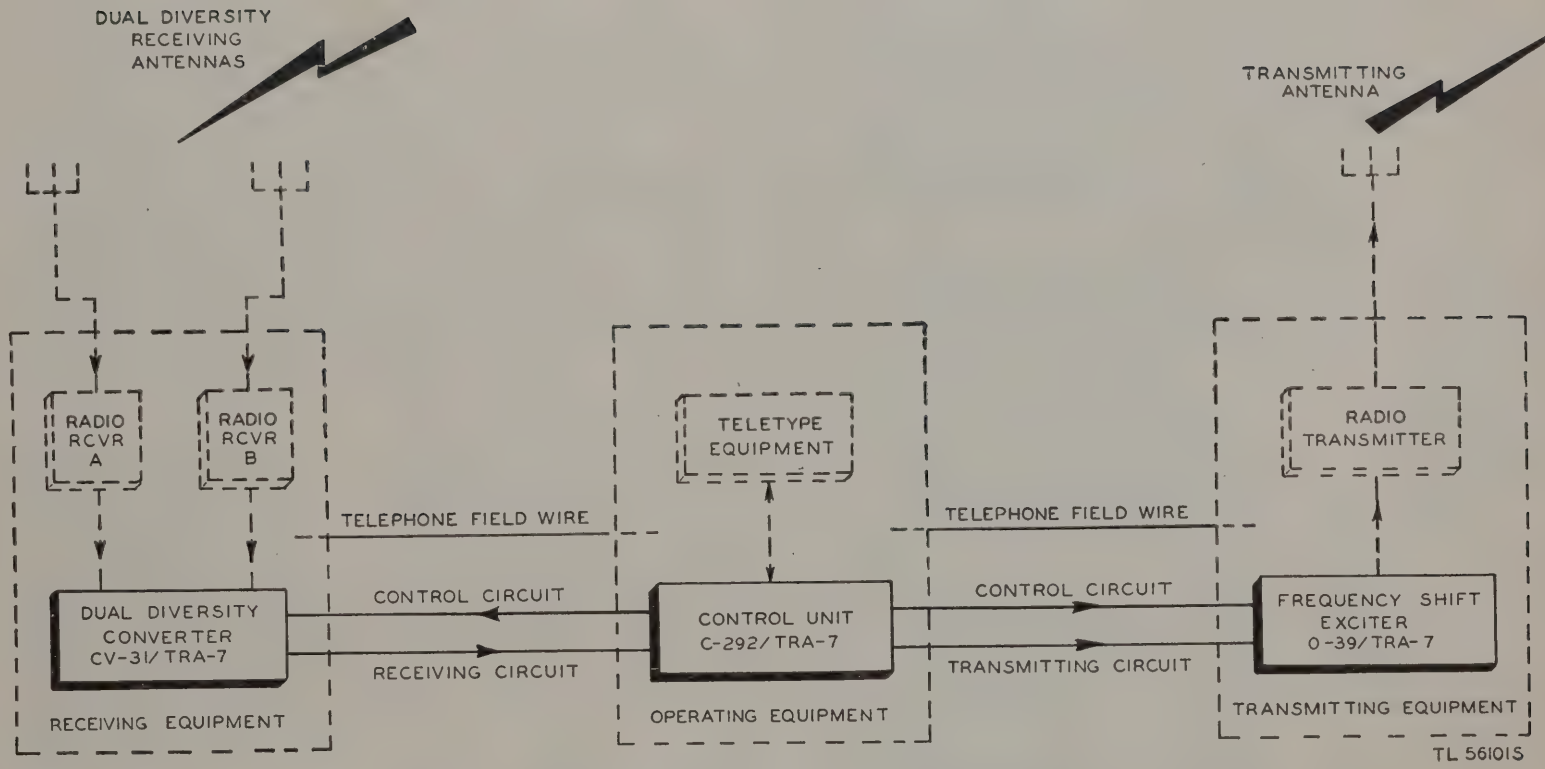

Figure 2. Simplified block diagram of Radio Teletype Equipment AN/TRA-7.

Such a connection may be used on one end if the prevailing radio conditions indicate that high signal strengths and very little fading may be expected.

d. For one-way reversible operation, where transmission occurs in only one direction at a time, hand-operated key control is provided as part of the control unit to disable the receiver when transmitting and to disable the transmitter while receiving. One-way reversible operation would normally be used when only one radio-frequency (r-f) channel is available for transmission in the two directions.

e. The control unit is also arranged to provide for emergency keying of the frequency shift exciter from the receiving shelter on a manual keying basis.

3. Technical Characteristics

a. Frequency Shift Exciter O–39/TRA–7.

Input signals.....d-c, mark +0.020 amp, space —0.025 amp
Output frequency....2 to 6 megacycles (mc)
Frequency shift.....212.5 to 850 cycles, depending on the frequency multiplication in the radio transmitter. The higher frequency is transmitted for the marking condition.
Number of tubes.....10
Power source.....115 v, 50–60 cycles
Power consumption.....185 watts

b. Dual Diversity Converter CV–31/TRA–7.

Input frequency.....400 to 470 kilocycles (kc), frequency shifted +425 cycles.
Input impedance.....300 ohms
Required input voltage.....500 microvolts (minimum)
Second intermediate frequency (if).....
Channel B freq.....29.3 kc ±425 cycles
Channel A freq.....50 kc ±425 cycles
Pass band:
NARROW.....1,500 cycles
WIDE.....3,000 cycles
Output:
NEUTRAL.....mark 0.060 amp space 0 amp
POLAR.....mark +0.025 amp space —0.025 amp
Number of tubes.....18
Power source.....115 v 50–60 cycles
Power consumption.....175 watts

c. Control Unit C–292/TRA–7.

Polar input.....mark +0.025 amp (receiving circuit).....space —0.025 amp
Polar output.....mark +0.020 amp (sending circuit).....space —0.025 amp
Neutral input and output.....mark 0.060 amp (extension circuit).....space 0 amp
Number of tubes.....15
Power source.....115 v 50–60 cycles
Power consumption.....170 watts

4. Table of Components

Component	Required No.	Height (in.)	Depth (in.)	Length (in.)	Weight (lb.)	Volume (cu. ft.)
Frequency Shift Exciter O–39/TRA–7	1	13	16⅞	21½	125	2.7
Dual Diversity Converter CV–31/TRA–7	1	19⅞	19⅞	19	220	7.07
Control Unit C–292/TRA–7	1	12¼	16⅞	21½	100	2.57

Note. This list is for general information only. See appropriate publications for information pertaining to requisition of spare parts.

5. Packaging Data

The three components of Radio Teletype Equipment AN/TRA–7 are normally supplied with Radio Set AN/MRC–2. No special packaging instructions are available.

6. Description of Major Components

a. Frequency Shift Exciter O–39/TRA–7.

(1) The frequency shift exciter unit (fig. 3) is

located with the transmitting equipment and functions as the master oscillator for the radio transmitter, thereby controlling the transmitter output frequency. The exciter unit consists of a master oscillator, an 850-cycle audio oscillator, a monitoring circuit, and a buffer amplifier, together with a built-in power supply. The output of the frequency shift exciter may be set at any frequency between 2 and 6 megacycles, depending on the desired operating frequency (which may be the same as or a multiple of the exciter frequency). The d-c polar telegraph signals applied to the exciter result in a shift in the output frequency which may be adjusted to provide an 850-cycle shift in the transmitter frequency. The higher frequency is transmitted for a mark signal and the lower frequency for a space signal.

(2) All controls and connections for the frequency shift exciter are mounted on the front panel. (See fig. 3.) The unit is inclosed in a black crackle-finish, metal cabinet equipped with a hinged access door in the top. The cabinet is mounted on four shock mounts to protect the equipment from the ordinary shock and vibration of transportation. The exciter chassis and front panel slide into the cabinet on guide rails and are held in place by eight knurled thumbscrews. The oscillator portion of the exciter unit is located in an oven which is provided with a heater and a thermostat in order to maintain the oscillator at approximately 60° C., thereby stabilizing the output frequency.

b. Dual Diversity Converter CV–31/TRA–7. (1) The dual diversity converter unit (fig. 4) is associated with the receiving equipment and functions to convert the i-f output of the two radio receivers (designated as receiver A and receiver B) into polar and neutral d-c telegraph signals. The use of two radio receivers, connected to separate antennas spaced several wavelengths apart (approximately 1,000 feet),

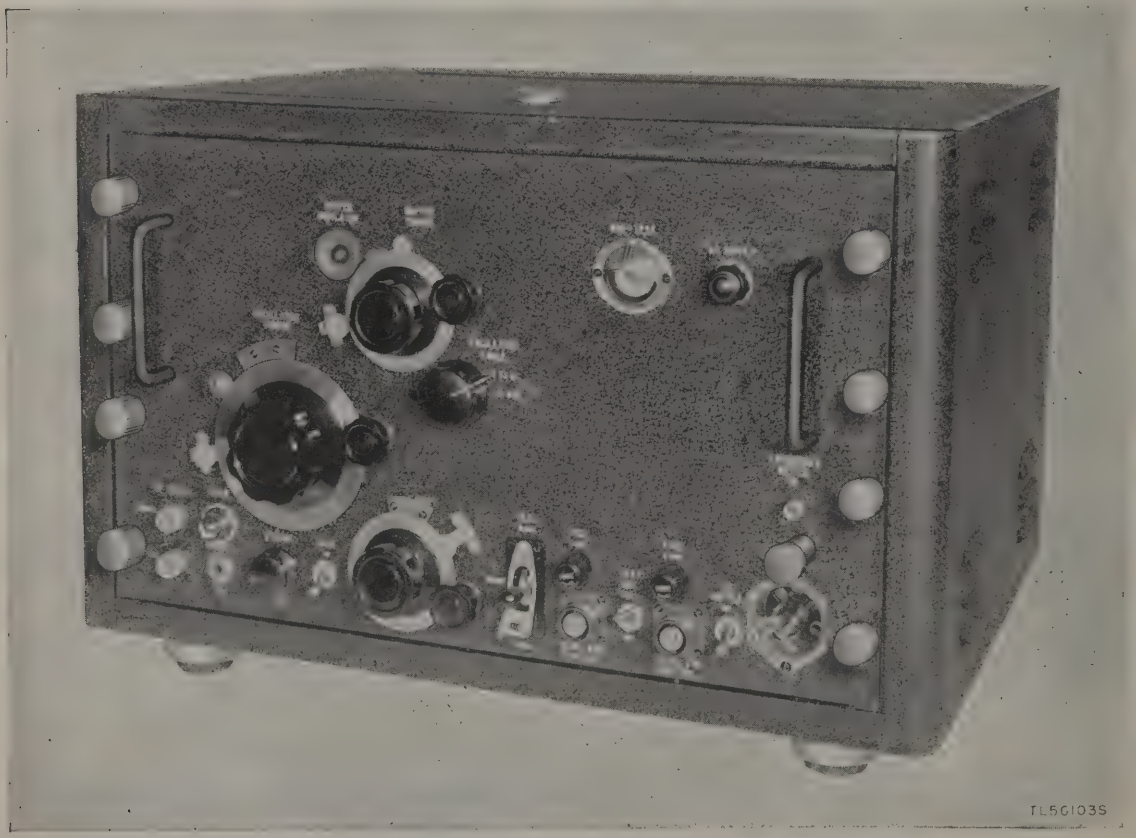

Figure 3. Frequency Shift Exciter O–39/TRA–7, front view.

results in a more nearly constant received signal, thereby minimizing selective fading. The d-c output circuit in the converter includes amplifiers and other controls to produce unbiased telegraph signals for transmission over local loops or extension circuits, either polar or neutral. The output control circuit is provided with a feature which, when connected by a switch (DRIFT COMPENSATOR), tends to minimize the signal bias if the frequencies of the received signals drift away from their normal values.

(2) The converter unit is assembled on a single chassis mounted in a black crackle-finish metal cabinet equipped with shock mounts so that the equipment will withstand the vibra-

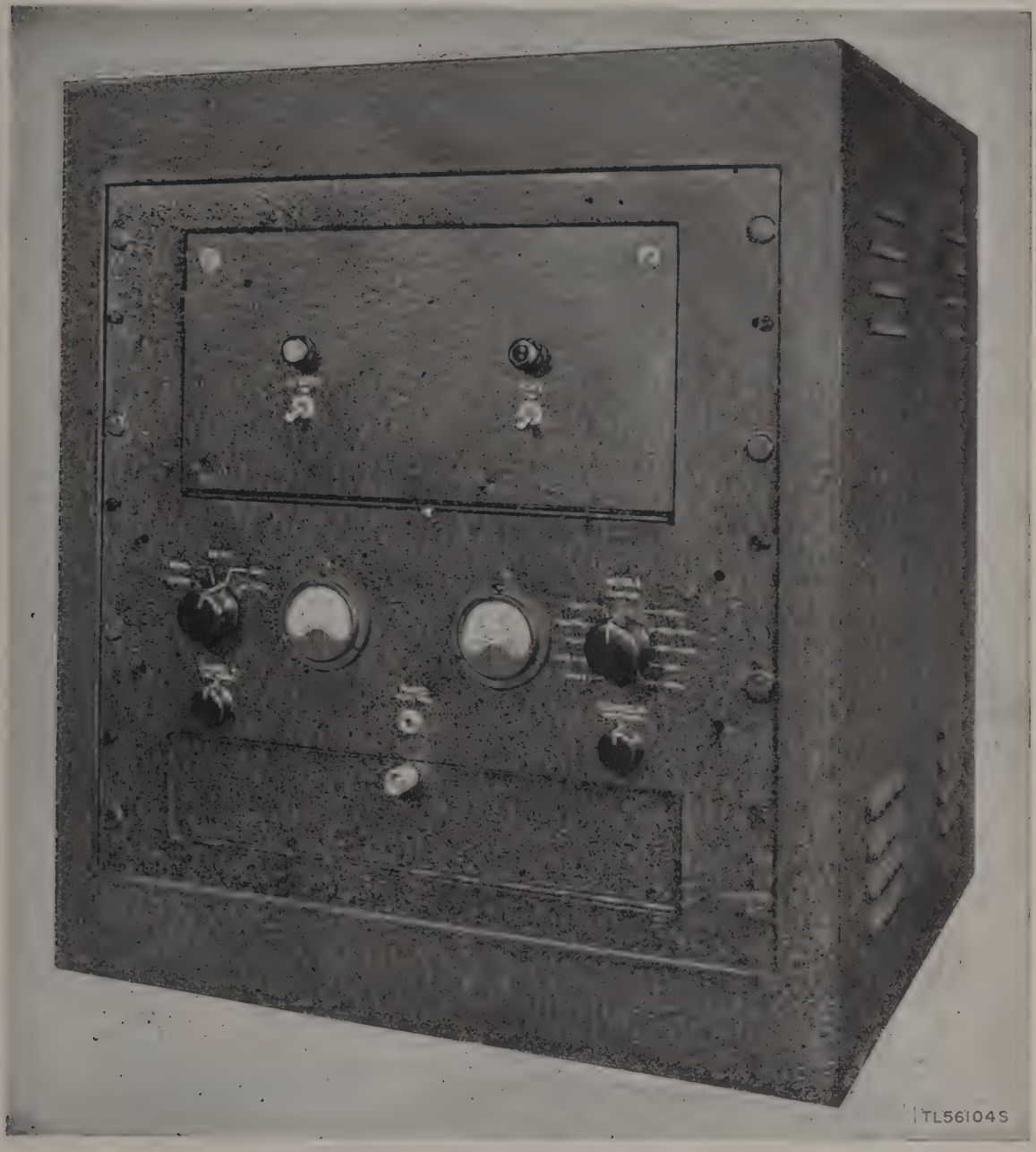

Figure 4. Dual Diversity Converter CV-31/TRA-7, front view.

tion of transportation. The converter chassis is assembled in a cradle which is so supported that it may be pulled out approximately 8 inches from the cabinet for maintenance and adjustment purposes. The chassis may be completely removed from the cabinet by releasing the stop latches on each side of the converter. Two hinged doors are provided on the converter front panel, the upper door held in place by two Dzus fasteners and the lower door held closed by a single knurled lockscrew. The upper door, when opened, makes it possible to reach the fuses and transformer connections while the lower door conceals a number of adjustment controls and switches required to prepare the unit for operation. All connections to the dual diversity converter are made through connectors located at the rear of the unit.

c. CONTROL UNIT C–292/TRA–7. (1) The control unit, associated with the teletype equipment, consists of an electronic repeater and a built-in power supply. The repeater converts the polar telegraph signals received from the dual diversity converter into neutral signals for operating a receiving teletypewriter. It also translates the neutral signals from a sending teletypewriter to polar signals for transmission over a wire line to the frequency shift exciter. The control unit also provides facilities for establishing full-duplex, half-duplex, one-way reversible, or emergency operation.

(2) The construction of the control unit is similar to that of the frequency shift exciter unit. All controls are mounted on the front panel which is held to the sheet-metal cabinet by eight knurled thumbscrews. (See fig. 5.) The chassis can be partly removed from the cabinet on guide rails for replacement of tubes or minor adjustments. In addition, the chassis can be completely removed from the cabinet for maintenance without removing the external connections which are made to the rear of the unit.

Section II. INSTALLATION

7. Siting

The location of the three Radio Teletype Equip-

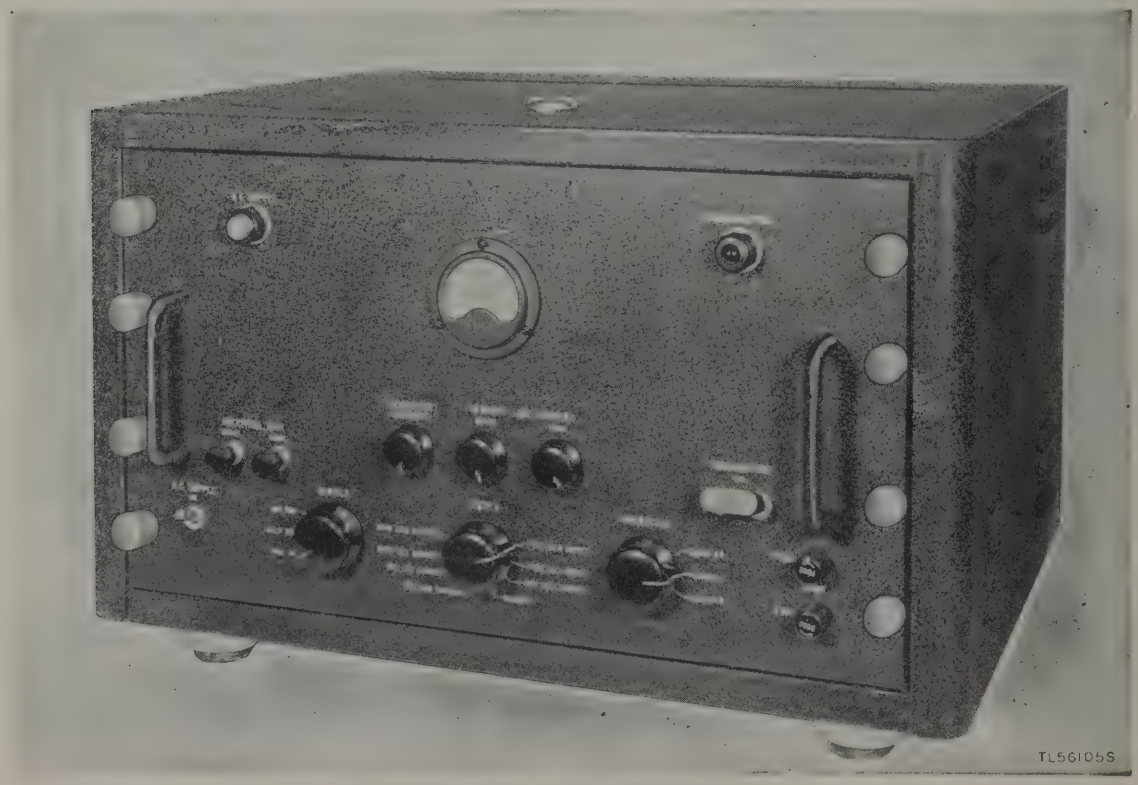

Figure 5. Control Unit C–292/TRA–7, front view.

ment AN/TRA–7 components depends upon the radio equipment with which they are associated. See Technical Manual of the radio set involved for siting instructions.

8. Uncrating, Unpacking, and Checking

a. Unpack the equipment carefully and inspect it for possible damage during shipment. Do not apply pressure to the meter faces. Check all components against the packing lists packed with the equipment to determine whether quantities and types are correct.

b. Mount the three components as designated in the Technical Manual for the radio set involved. If such a manual is not available, mount the Frequency Shift Exciter O–39/TRA–7 adjacent to the radio transmitter, and the Dual Diversity Converter CV–31/TRA–7 adjacent to the two radio receivers. Control Unit C–292/TRA–7 may be located at the receiving station, the transmitting station, or any desired location within 10 miles of the two.

9. Connections and Interconnections

The connections described in paragraphs 10 through 13 are those for Radio Set AN/MRC–2. For connection to other types of radio sets not covered by a Technical Manual, provide connections equivalent to those given for Radio Set AN/MRC–2.

10. Transmitting Shelter Connections (fig. 6)

a. Insert the red plug at one end of Cord CX–961/TRA–7 (RED) into the red jack marked LOCAL CW CONTROL on the front panel of the frequency shift exciter, and insert the plug at the other end of the cord into the RED jack mounted on Junction Box J–207/MRC–2 on the wall of the shelter below the frequency shift exciter.

b. Insert the blue plug at one end of Cord CX–961/TRA–7 (BLUE) into the blue jack marked SEND AND CONTROL on the front panel of the exciter unit and insert the plug at the other end of the cord into the BLUE jack mounted on Junction Box J–207/MRC–2 on the wall of the shelter below the frequency shift exciter.

c. Insert the socket at one end of power Cord CX–962/TRA–7 into the three-pronged jack marked AC SUPPLY on the front panel of the exciter unit. Insert the three-pronged plug at the other end of the Cord into an alternating-current (a-c) power supply and ground outlet in the shelter.

d. Insert the plug of Cord CG–390/U into the jack marked FREQUENCY METER IN on the exciter front panel. Connect the plug at the other end of the cord to the jack marked PHONE in Frequency Meter BC–221.

e. Insert the plug at one end of the transmitter Cord CG–389/U (6 ft. 0 in.) into coaxial fitting J112 which is in turn connected to the jack marked RF OUTPUT NORMAL on the exciter front panel. Connect the plug marked BC–610 CRYSTAL SOCKET on the opposite end of the cable to the crystal socket in the tuning unit in Radio Transmitter BC–610–( ). Be sure to insert the plug at the radio transmitter with the normal side (grounded side) to the right, looking at it from the front of the transmitter. Connect the cable ground lead to the chassis ground in Radio Transmitter BC–610–( ). Make sure the toggle switch on the tuning unit is thrown to XTAL.

f. Connect a pair of headphones to the jack marked PHONES 850 ∽ TEST on the exciter front panel.

g. Insert the plug of the cord from the Telephone EE–8–( ) into the EE–8 jack of Junction Box J–207/MRC–2 mounted on the wall of the transmitter shelter under the frequency shift exciter unit shelf.

Note. Do not insert plug from hand telegraph key into KEY jack located under the frequency shift exciter unit shelf except for emergency continuous-wave (c-w) operation from the transmitting shelter.

h. Connect pick-up Antenna AT–137/MRC–2 (or equivalent) to the ANT and GND binding posts on the frequency meter and place the other end of the cable near the output connections of the radio transmitter.

11. Receiving Shelter Connections (fig. 8)

a. Insert the plug at one end of Cord CG–406/TRA–7 into jack J101 located at the rear of the converter unit and the plug at the other end of the cord into the coaxial connector on the front panel of Radio Receiver R–182( )/MRC–2, designated as receiver A.

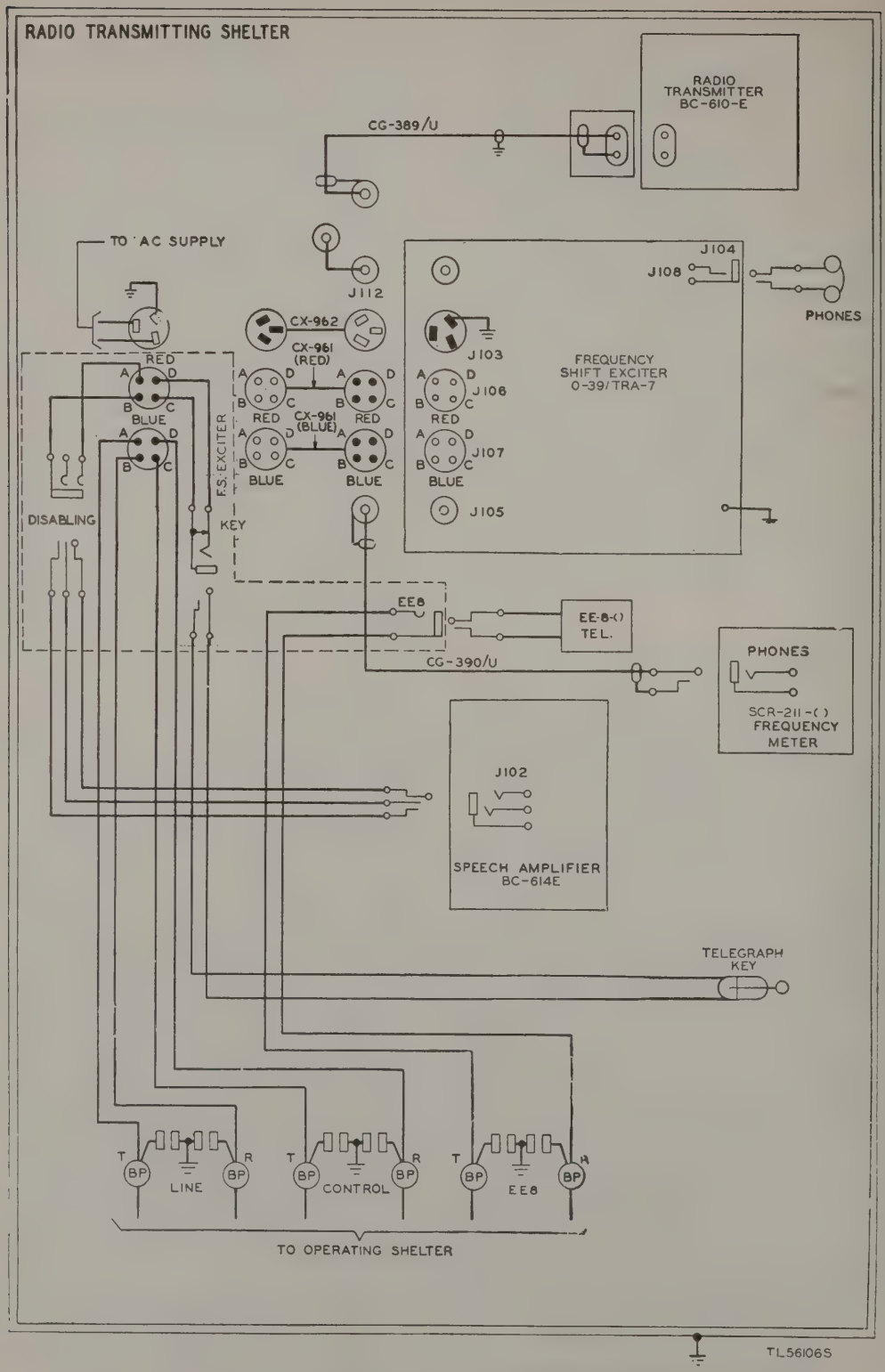

Figure 6. Connection of frequency shift exciter to equipment in transmitting shelter.

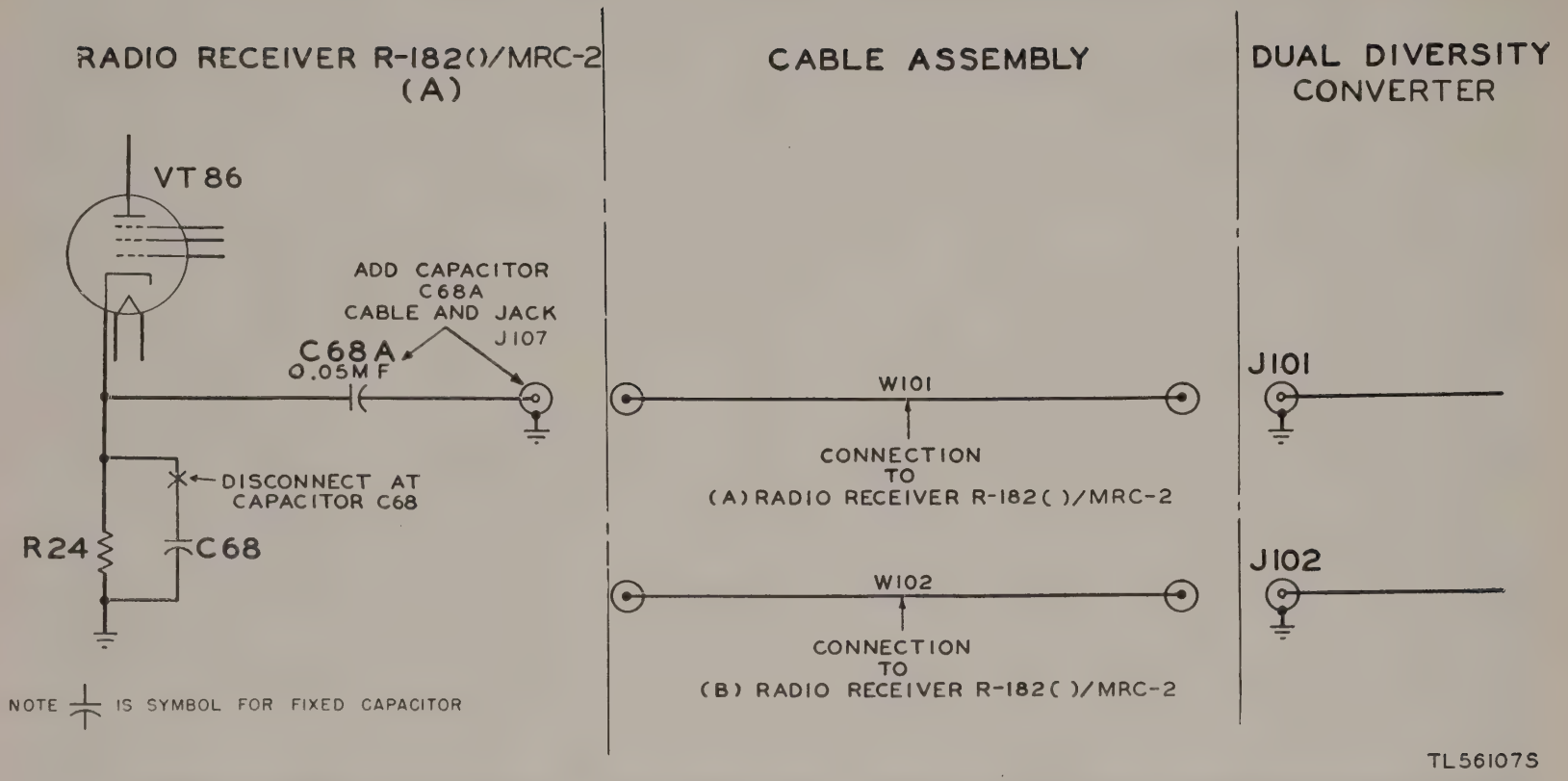

Figure 7. Modification of Radio Receiver BC-342-( ) to Radio Receiver R-182( )/MCR-2 and cable assemblies for use with dual diversity converter.

b. Insert the plug at one end of second Cord CG–406/TRA–7 into jack J–102 at the rear of the converter unit and the plug at the other end of the cord into the coaxial connector on the front panel of the second Radio Receiver R–182( )/MRC–2, designated as receiver B.

c. Insert the plug at one end of Cord CX–953/TRA–7 into jack J103 in the rear of the converter unit. Connect the blue plug at the other end of the cord into the BLUE jack in the operating bench.

d. Insert the plug at one end of Cord CX–952/TRA–7 into jack J404. Insert the red plug at the other end of the cord into the RED jack in the operating bench.

e. Insert the plug at one end of Cord CX–955/TRA–7 into jack J402. Insert the plug at the other end of this cord into socket SO1 on the front panel of Radio Receiver R–182 ( )/MRC–2 (receiver A).

f. Insert the plug at one end of second Cord CX–955/TRA–7 into jack J403. Insert the plug at the other end of this cord into socket SO1 on the front panel of second Radio Receiver R–182( )/MRC–2 (receiver B).

Note. The coaxial connector jack J–107 on Radio Receiver R–182( )/MRC–2 connects to the output of the final i-f amplifier stage in the receiver. If a receiver is used that is not equipped with an i-f output connection it will be necessary to modify the receiver to provide an i-f output through a 0.05 microfarad (mf) capacitor. (See fig. 7.)

g. Control Box C–345/MRC–2 is equipped with two permanently attached cords labeled TO REC. A and TO REC. B. Insert the plugs of these cords into the SPEAKER 2ND AUDIO jacks of receivers A and B respectively. Connect left-hand receiver Speaker LS–3 to speaker jack nearest it on the control box with Cord CD–267. Connect the right-hand Speaker LS–3 to speaker jack nearest it on the control box with Cord CD–135.

h. Insert the red plug at one end of power Cord CX–954/TRA–7 into jack J104 at the rear of the converter cabinet. Connect the three-prong plug at the other end of the cord assembly to the a-c power supply and ground outlet provided.

i. Insert the red plug of the receiving cord and the black plug of the sending cord of monitoring Teletypewriter TG–7A to the TTY RED jack and the TTY BLK jacks, respectively, located in the operating bench.

j. Insert plug connected to the cord of the manual telegraph key into the jack marked KEY on the operating bench.

k. Insert the plug from the Telephone EE–8–( ) into the EE–8 jack on the operating bench.

12. Operating Shelter Connections (fig. 9)

a. Insert the plug from the Telephone EE–8–( ) marked TRANSMITTER SHELTER into the jack marked EE–8 TRANS and the plug from the Telephone EE–8( ) marked RECEIVER SHELTER into the jack marked EE–8 REC.

b. Insert the plug at one end of Cord CX–956/TRA–7 into jack J103 in the rear of the control unit and the yellow plug at other end of the cord into the YELLOW jack in the operating bench.

c. Insert the plug at one end of Cord CX–958/TRA–7 into jack J102 in the rear of the control unit and the green plug at the other end of the cord into the GREEN jack in the operating bench.

d. Insert the plug at one end of Cord CX–957/TRA–7 into jack J101 in the rear of the control unit and the black plug at the other end of the cord into the BLACK jack in the operating bench.

e. Insert the plug at one end of power Cord CX–959/TRA–7 into the three-prong jack J107 in the control unit. Insert the three-prong plug at the other end of the power patching cord into the 115-volt a-c power supply receptacle provided.

f. If the teletypewriter equipment is to be used locally in the operating shelter for full-duplex operation, connect the patching cords as outlined in *g* through *n* below. If the teletypewriter equipment is to be used locally in the operating shelter on a half-duplex or a one-way reversible basis, connect the patching cords as outlined in *g*, *i*, *j*, *l*, and *m* below. If the extension circuits are to be connected to teletypewriter equipment external to the operating shelter, use the procedure outlined in *n* below.

g. Insert the red plug of the sending teletypewriter (adjacent to control unit) cord into the SEND TTY RED jack on the operating bench (adjacent to the teletypewriter). Insert the black plug of the sending teletypewriter cord into the SEND TTY BLACK jack. Con-

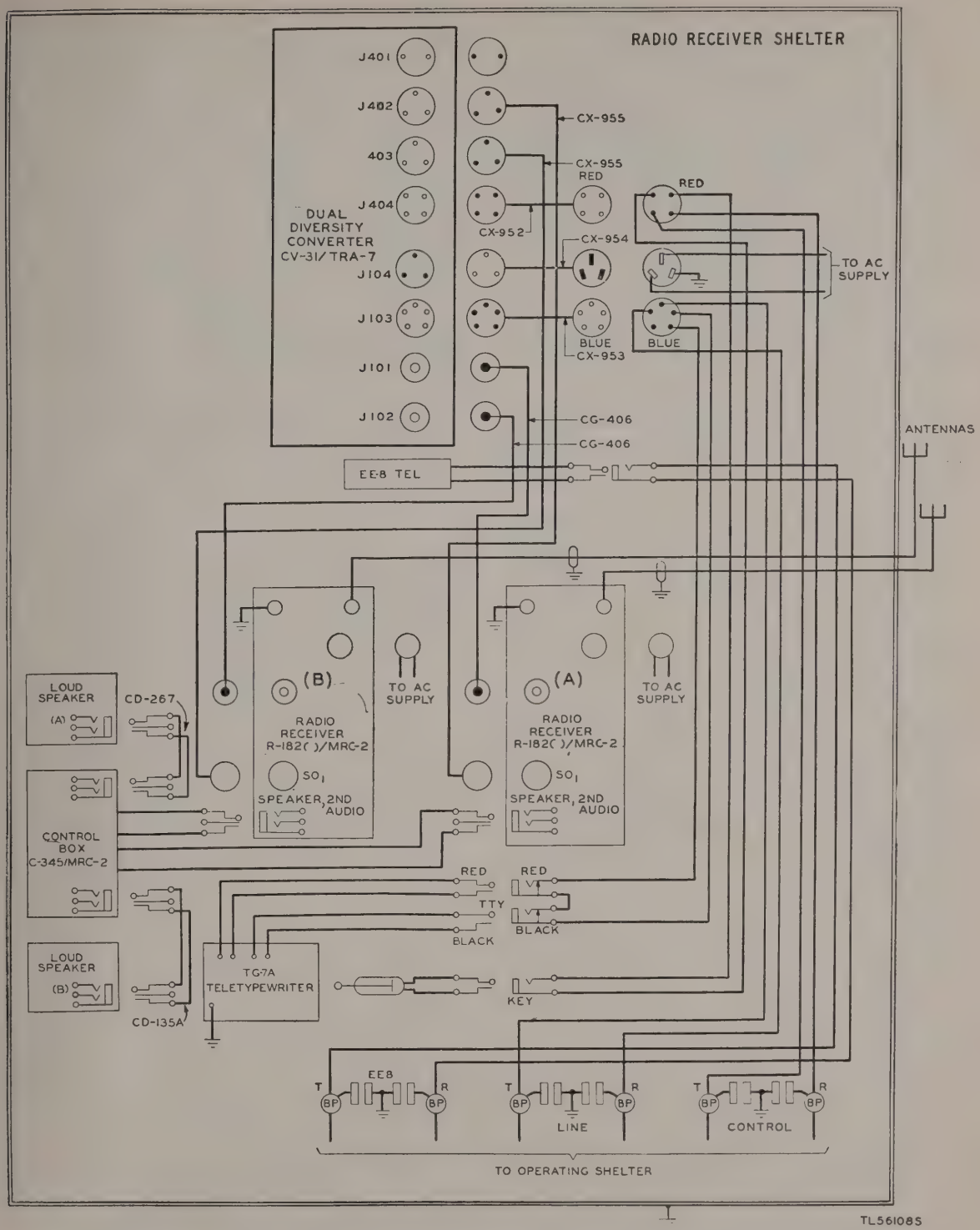

Figure 8. Connection of dual diversity converter to equipment in receiving shelter.

nect the power cord of the teletypewriter to the 115-volt a-c power supply receptacle.

h. Insert the red plug of the receiving teletypewriter (to the right of the sending teletypewriter) cord into the REC TTY RED jack on the operating bench. Insert the black plug of the receiving teletypewriter cord into the REC TTY BLACK jack in the operating bench. Connect the power cord of the receiving teletypewriter to the 115-volt a-c power supply receptacle provided in the shelter.

i. Insert one end of a patching Cord CC–66 into the SEND TTY RED jack and the other end of the cord into the SEND EXT RED jack on the operating bench.

j. Insert one end of a patching Cord CC–66 into the SEND TTY BLACK jack and the plug at the other end of the patching cord into the SEND EXT BLACK jack on the operating bench.

k. Insert the plug at one end of a patching Cord CC–66 into the REC TTY RED jack and the plug at the other end into the REC EXT RED jack in the operating bench.

l. Connect strap wires *A* between binding posts 1 and 2, and 3 and 4 on the terminal strip marked TO EXTERNAL EQUIPMENT.

m. If tape receiving is required, insert cord with red plug shell from Typing Reperforator TG–26A into SEND EXT RED jack for half-duplex and into REC EXT RED jack for full-duplex service. If tape sending is required, insert cord with gray plug shell of transmitter-distributor into SEND EXT GRAY jack.

n. If connection is to be made to telegraph equipment located external to shelter, remove straps *A* from binding posts marked TO EXTERNAL TELEGRAPH EQUIPMENT. For full-duplex operation, connect field wire leads from the receiving telegraph equipment to binding post designated *R* and *ground bus* respectively, and from the sending telegraph equipment to binding post designated *T* and *ground bus* respectively. Connect straps *B* between binding posts T and 2, and R and 3. If connection is made for half-duplex or one-way reversible operation, connect the field wire leads external from the telegraph equipment to the binding post designated *T* and *ground bus*, respectively. Strap binding post T to 2.

13. Interconnections Between Shelters

Make the following connections between shelters using field Wire W–110–B:

From—		To—	
Shelters—	Binding posts—	Shelter—	Binding posts—
Operating	EE8 (transmitting).	Transmitting	EE8
Operating	LINE (transmitting).	Transmitting	LINE
Operating	CONTROL (transmitting).	Transmitting	CONTROL
Operating	EE8 (receiving).	Receiving	EE8
Operating	LINE (receiving).	Receiving	LINE
Operating	CONTROL (receiving).	Receiving	CONTROL

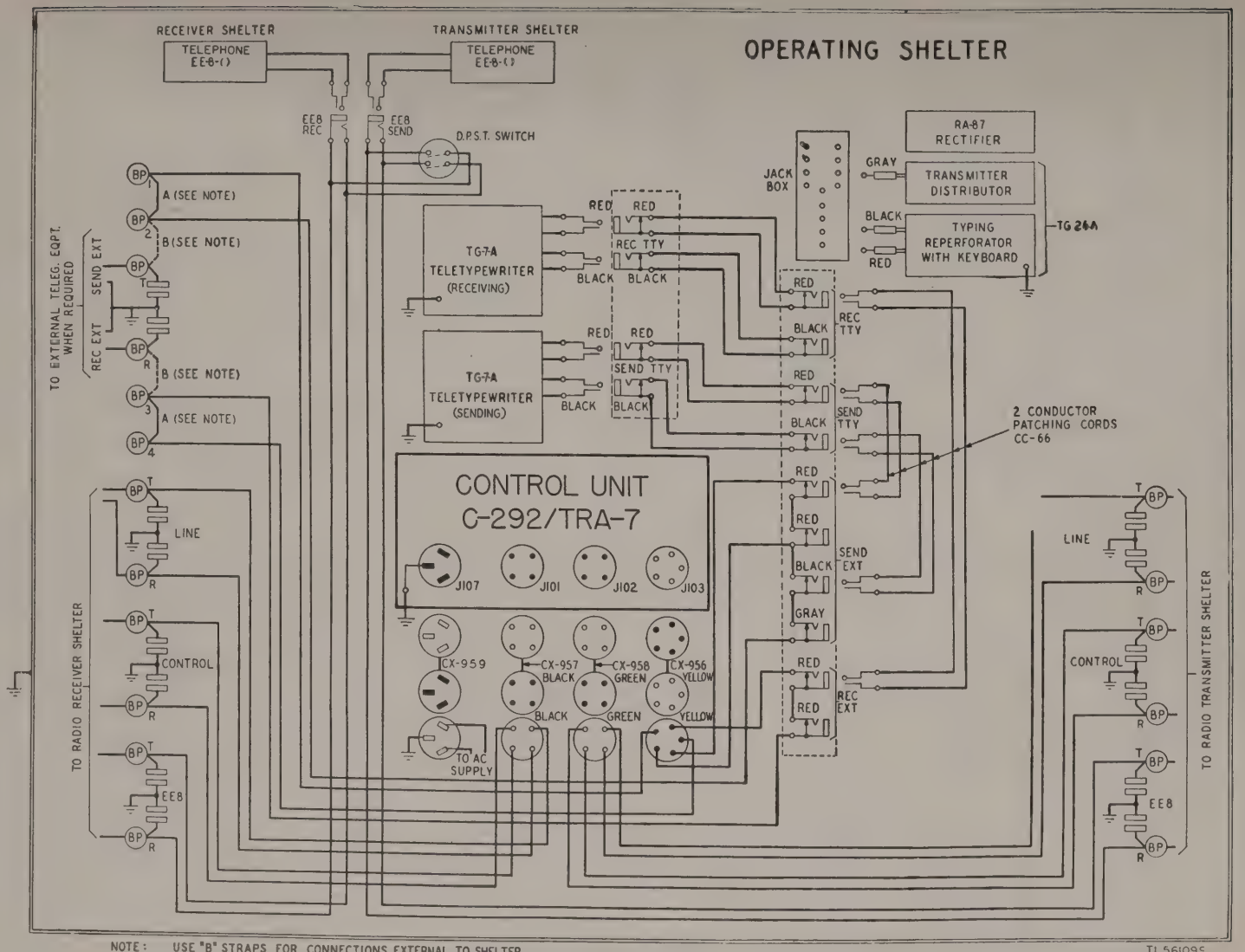

NOTE: USE "B" STRAPS FOR CONNECTIONS EXTERNAL TO SHELTER.
USE "A" STRAPS FOR CONNECTIONS INTERNAL TO SHELTER

Figure 9. Connection of control unit to teletype equipment.

Section III. CONTROLS AND THEIR USE

Note. For information on destroying the equipment to prevent enemy use, see destruction notice at the front of the manual.

14. Frequency Shift Exciter O–39/TRA–7 (fig. 10)

a. OSCILLATOR TUNING CONTROL. The OSCILLATOR TUNING control is the large calibrated dial located on the left-hand portion of the exciter front panel. The dial is connected to the oscillator tuning capacitor and is provided to tune the oscillator section of the exciter unit to the desired frequency between 2 and 6 mc. A vernier knob and scale are associated with the dial to provide an accurate means of calibration. When the dial is properly set, a lockscrew prevents the control from moving.

b. BUFFER TUNING CONTROL. The BUFFER TUNING control is a smaller calibrated dial located above and to the right of the OSCILLATOR TUNING control. The dial tunes the output of the buffer-amplifier portion of the exciter unit and the correct tuning is indicated by maximum brightness of the BUFFER INDICATOR lamp. A lockscrew and vernier control are also associated with the BUFFER TUNING control.

c. OSCILLATOR RANGE SWITCH. The OSCILLATOR RANGE switch is a two-position switch located in the center of the front panel and provided to select the proper oscillator frequency range. In one position the oscillator may be tuned from 2 to 3.5 mc, and in the second position from 3.5 to 6 mc.

d. SHIFT CONTROL. The SHIFT control is a small calibrated dial located below and to the right of the OSCILLATOR TUNING control. Its function is to adjust the amount of frequency shift of the oscillator to provide an 850-cycle frequency shift of the transmitted signal. The SHIFT dial is also provided with a vernier knob and scale as well as a lockscrew to prevent the dial setting from being accidentally changed.

e. TEST KEY. The TEST key is a three-position toggle switch provided for test and adjustment purposes. In the MARK position the exciter unit produces a steady mark signal while in the SPACE position a steady space signal is produced. For normal operation the TEST key is left in the center NORM position. A lock arrangement is provided to lock the switch in any position.

f. TEST OSC SWITCH. The TEST OSC toggle switch is provided to turn on or off the 850-cycle test oscillator in the monitoring circuit. With the switch in the up position (850 ∽) the oscillator will operate.

g. 850 ∽ TEST INDICATOR. The 850 ∽ TEST indicator is an electron-ray indicator tube used to indicate zero beat frequency in the mixer tube during adjustment of the exciter unit.

h. VOLUME, 850 ∽ TEST, CONTROL. The VOLUME control, located directly below the OSCILLATOR TUNING control, is provided to regulate the volume of the signals from the output of the mixer circuit to the PHONES jack.

i. RF OUTPUT, NORMAL AND ADJ. Two coaxial output jacks are provided for connecting the exciter signal to the associated transmitting equipment. The NORMAL connector has a fixed output impedance and is used when connecting the frequency shift exciter to the radio transmitter in Radio Set AN/MRC–2. The ADJ connector is provided for use with equipment requiring an abnormal driving voltage different from that provided at the NORMAL connector. A six-position switch is located inside the exciter unit on the buffer compartment and may be set to give the desired driving voltage at the ADJ connector.

j. OVEN ON SWITCH. The OVEN ON switch connects heater current to the oven in the oscillator compartment. The oven temperature is controlled by a thermostat and the OVEN indicator lamp indicates when the thermostat contacts are closed.

k. AC SUPPLY ON SWITCH. The AC SUPPLY switch connects power to the frequency shift exciter unit when the switch is in the ON

position. The AC SUPPLY indicator lamp indicates when power is applied to the unit. The a-c power connection to the exciter is made through the AC SUPPLY connector located in the lower right-hand corner of the exciter unit.

15. Dual Diversity Converter CV–31/TRA–7

a. Front Panel Controls (fig. 11). (1) *AC SUPPLY switch.* The AC SUPPLY switch, located on the left half of the upper access door, supplies filament power to the tubes in the converter unit. The white indicator lamp mounted directly above the toggle switch indicates when power is applied to the filament circuit.

(2) *PLATE switch.* The PLATE toggle switch, when thrown to ON, connects power to the plate-voltage transformer, thereby providing plate and bias voltages for operation of the converter circuits. The PLATE toggle switch is so connected that plate power cannot be applied unless the AC SUPPLY switch is in the ON position. The red indicator lamp above the PLATE switch indicates when plate power is applied.

(3) *OUTPUT switch.* The four-position OUTPUT switch permits interchanging the polarities of the output mark and space signals and establishes test mark and space output signals for adjustment purposes.

(4) *Meters A and B.* The indicator meter A measures the output of the discriminator circuit for channel A. Meter B, the right-hand meter, is associated with the METER B switch and indicates the output of the discriminator circuit for channel B (METER B switch in CHAN B position). This meter also measures other currents and voltages throughout the converter as indicated by the setting of the METER B switch. (See (5) below.)

(5) *METER B Switch.* The METER B switch is an 11-position switch and connects the right-hand meter (B) to the following circuits.

(a) CHAN B position. Meter B indicates the output current of the channel B discriminator circuit.

(b) CHAN A+B position. Meter B indicates the combined output current of the two channels.

(c) POLAR and NEUTRAL positions. With the switch in the POLAR position the meter B will indicate the polar loop current. In the NEUTRAL position the meter will indicate the neutral loop current.

(d) INPUT position. Meter B indicates the input voltage applied to the mark-hold circuit.

(e) COMP AMP position. Meter B indicates the feedback voltage from the drift compensator circuit.

(f) Five voltage positions. Meter B indicates the voltage of the +275-volt supply (+275V), the regulated +150-volt supply (REG +150V), the regulated —150-volt supply (REG —150V), the —150-volt unregulated supply (—150V), and the —400-volt unregulated supply (—400V).

(6) *CHANNEL A, FINE TUNING control.* This control, located directly below the OUTPUT control, provides a fine adjustment of the beat-frequency oscillator for channel A. It is adjusted to produce a second intermediate frequency of 50 kc for channel A.

(7) *CHANNEL B, FINE TUNING control.* This control, located directly below the METER B switch, provides a fine adjustment of the beat-frequency oscillator for channel B. It is adjusted to produce a second intermediate frequency of 29.3 kc for channel B.

(8) *PHONES, KEYED TONE jack.* The PHONES jack is provided for connecting a headset to the output of the converter unit to enable the operator to monitor the keyed tone output signal.

b. Controls Behind Front Panel Doors (fig. 12). (1) *DRIFT COMPENSATOR controls.* A toggle switch and two controls are associated with the drift compensator circuit. These controls are the left-hand controls mounted behind the lower hinged panel on the converter unit. The toggle switch permits connecting or disconnecting the drift compensator circuit to the dual diversity converter. With the switch in the IN position the compensator circuit tends to minimize the biasing of the output teletype signals due to unequal + and — signal voltages resulting from a drift of the r-f carrier frequencies. The LIMITER control adjusts the limiter bias in the drift compensator circuit while the AMP GAIN control adjusts the magnitude of the signal delivered from the discriminator to the amplifier in the drift compensator circuit.

(2) *NEUTRAL OUTPUT control.* The

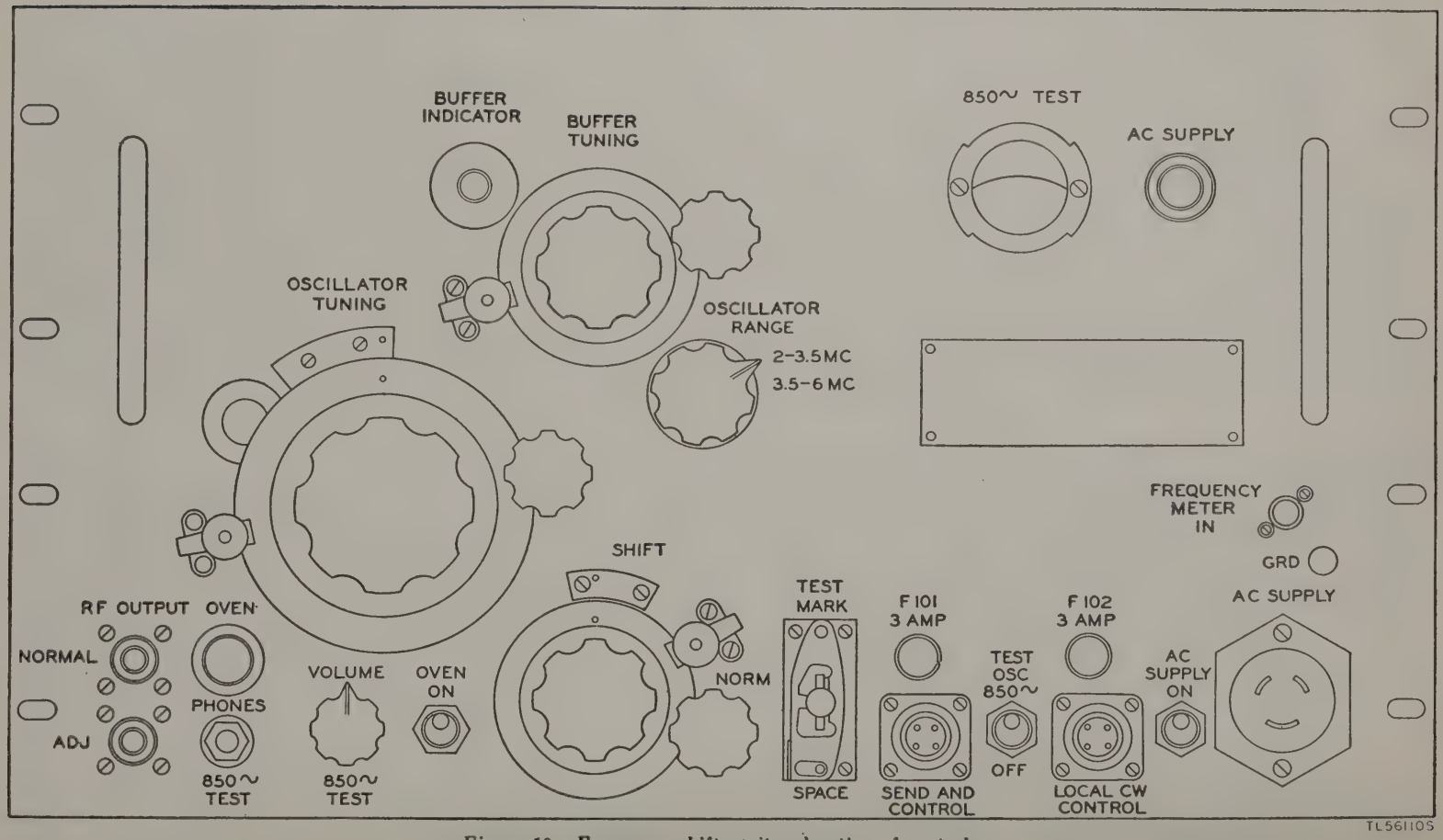

Figure 10. Frequency shift exciter, location of controls.

NEUTRAL OUTPUT control adjusts the loop current to a normal value of about 60 milliamperes (ma) on MARK.

(3) *BAND WIDTH switch.* The two-position BAND WIDTH switch provides a selection of either a NARROW (1,500 cycles) or a WIDE (3,000 cycles) band-pass filter for channels A and B. The filters are provided to exclude noise and other interfering frequencies outside of the minimum band width required.

(4) *MARK HOLD LEVEL control.* The MARK HOLD LEVEL control adjusts the level of the rectified carrier necessary to nullify the carrier control mark hold feature while a signal is being received.

(5) *POLAR OUTPUT controls.* Two POLAR OUTPUT controls are provided to adjust the loop current to the proper operating

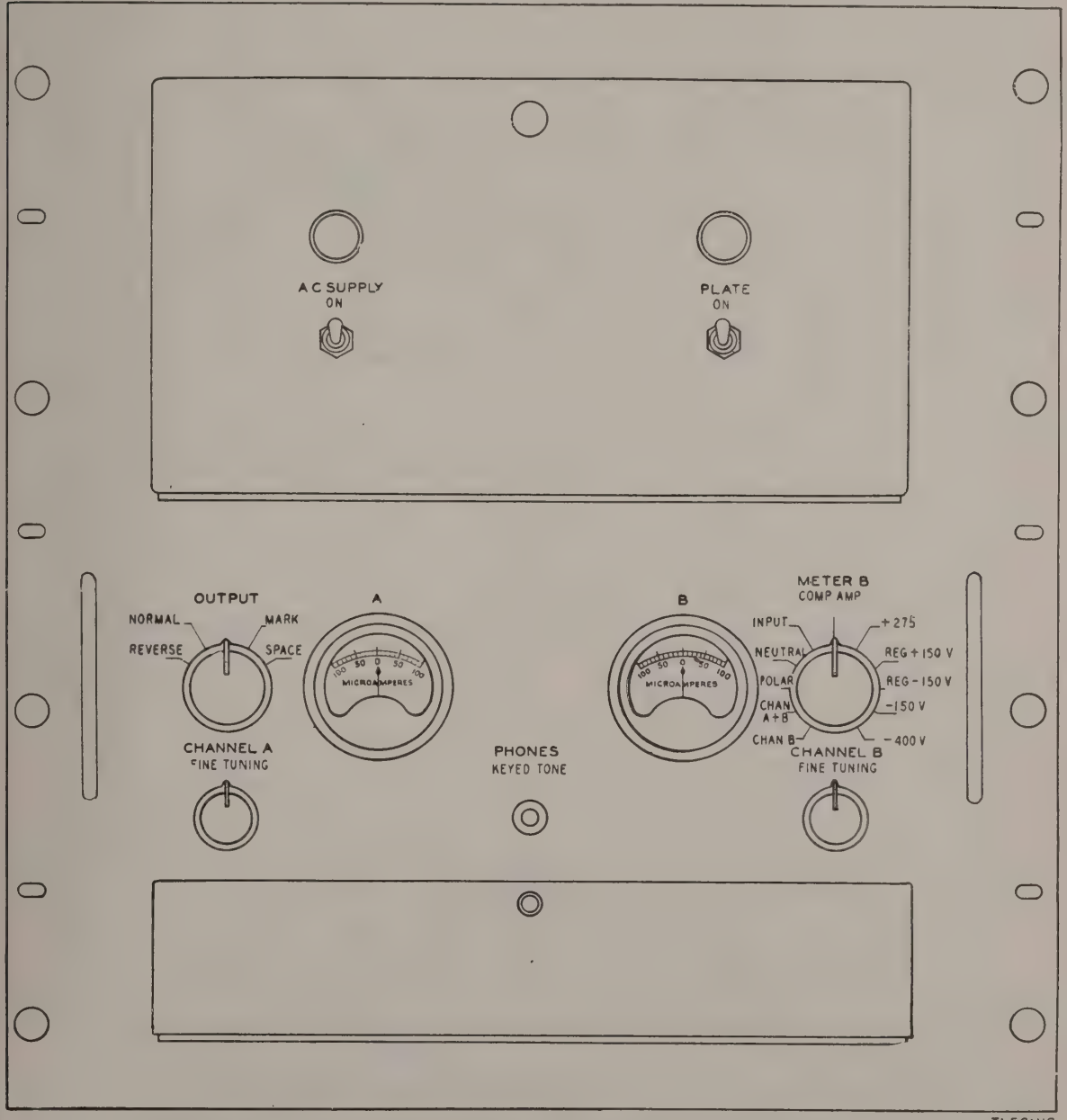

Figure 11. Dual diversity converter, location of front panel controls.

value. The left-hand SPACE control adjusts the loop space current to a value of about —25 ma, and the right-hand MARK control adjusts the loop mark current to a value of about +25 ma.

(6) *L.P. FILT switch.* The L.P. FILT toggle switch is provided to connect additional capacitors to the filter in the output of the discriminator for low signaling speeds.

c. CONTROLS ON CONVERTER CHASSIS (fig. 13). (1) *COMP AMP screw driver adjustment.* The COMP AMP screw driver control, located on the top rear of the converter chassis, is provided to adjust the amount of feedback voltage to the drift compensating circuit.

(2) *BIAS A screw driver adjustment.* The BIAS A screw driver control, located next to the COMP AMP control, is provided to adjust

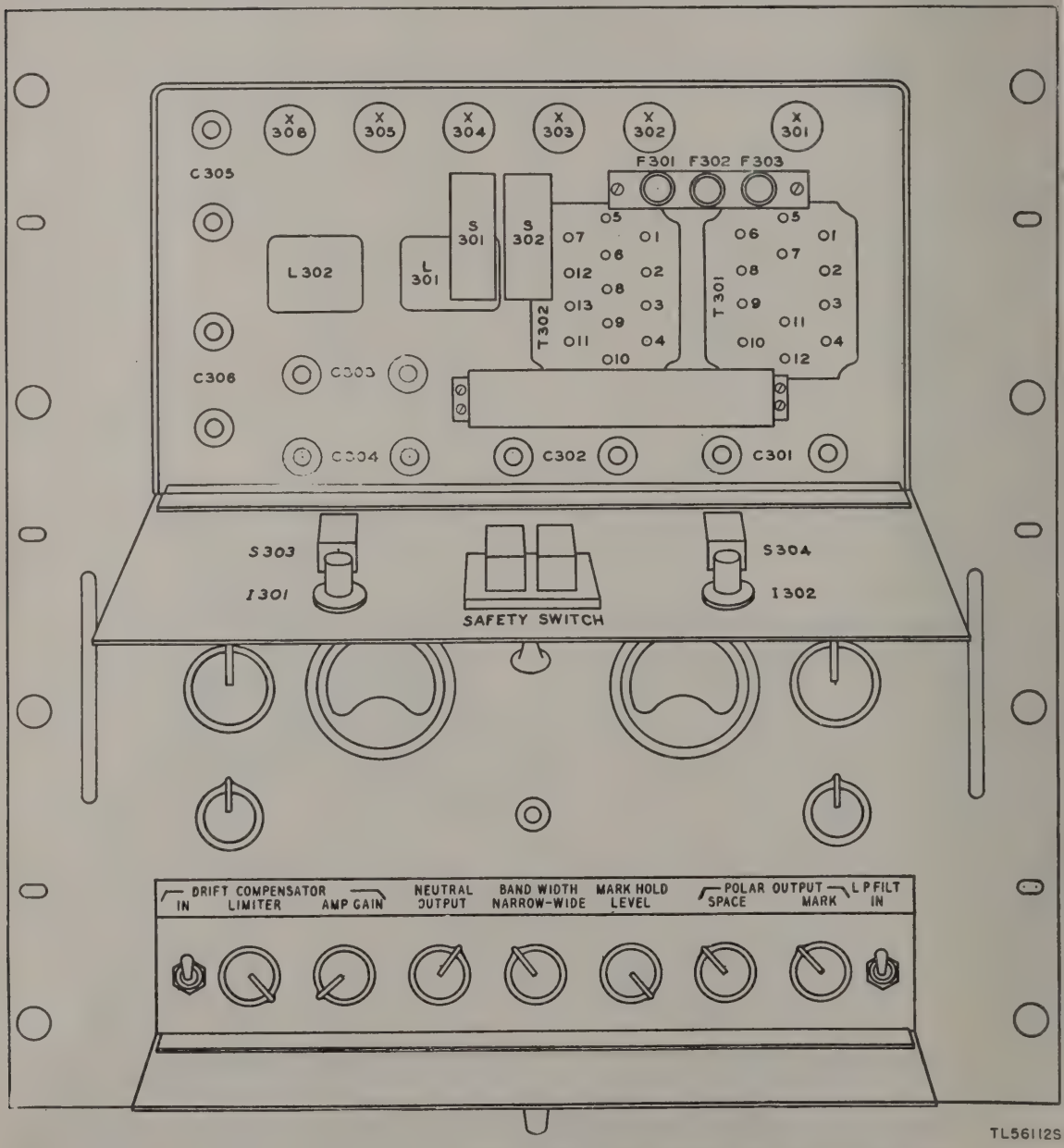

TL56112S

Figure 12. Dual diversity converter, location of front panel controls with hinged panels open.

the bias of tube V113 to make the output signals unbiased.

(3) *BIAS B screw driver adjustment.* The BIAS B screw driver control adjusts the voltage on the grids of tube V114 to make the drift compensator signals unbiased.

(4) *COMP BAL screw driver adjustment.* The COMP BAL screw driver control adjusts the balance between the mark and space voltage changes for equal swings to control the drift compensator circuit.

(5) *Tuning Capacitors C101, C103, C105, and C106.* *(a) C101.* Capacitor C101 tunes the input circuit of channel A to the incoming intermediate frequency (400 to 470 kc).

Note. A red dot is painted on the shafts of capacitors C101, C103, C105, and C106 and indicates minimum capacitance when it is adjacent to the black dot painted on the chassis.

(b) C103. Capacitor C103 tunes the input circuit of channel B to the incoming intermediate frequency (400 to 470 kc).

(c) C105. Capacitor C105 tunes the beat-frequency oscillator for channel A to 50 kc

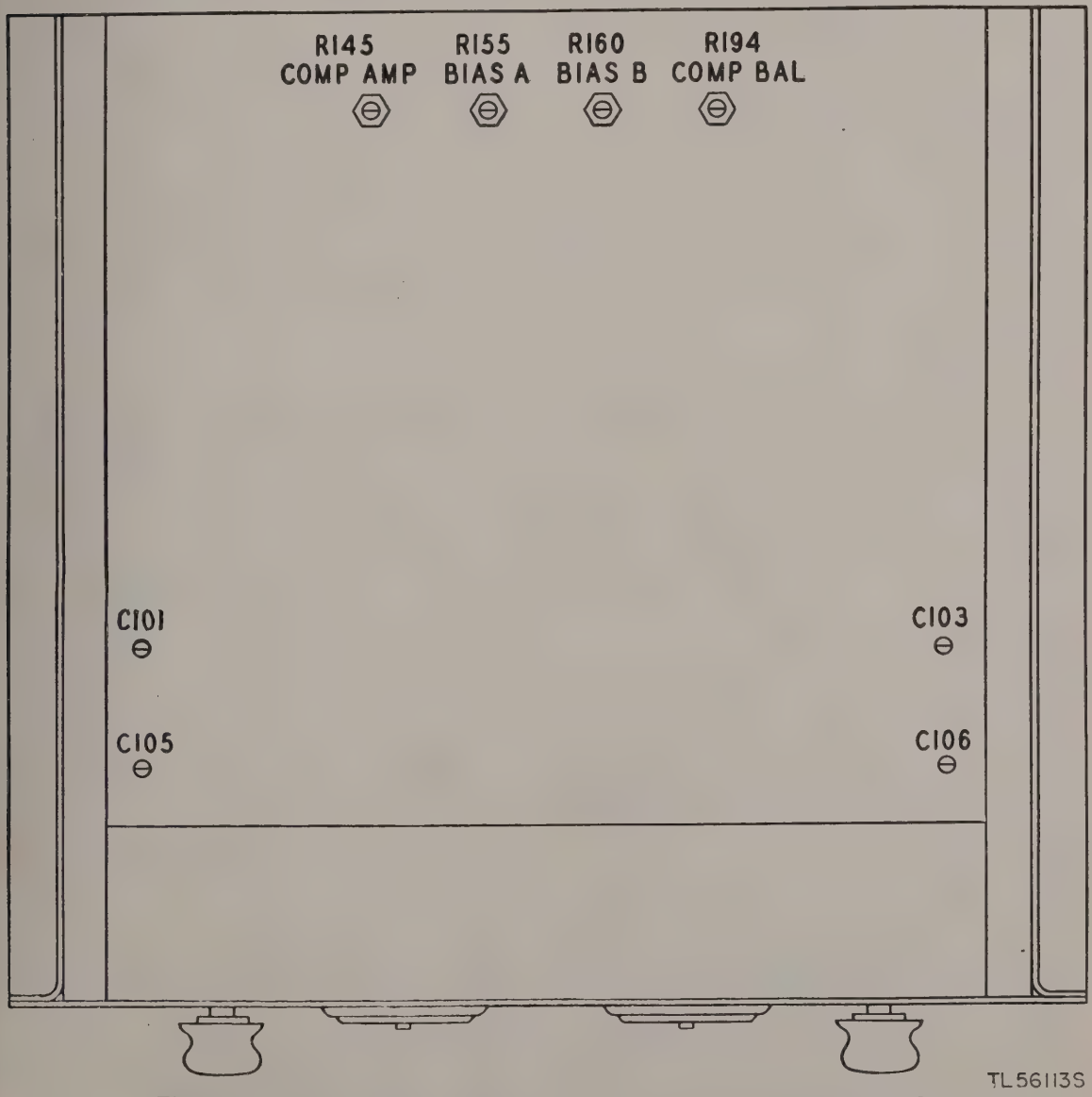

Figure 13. Dual diversity converter, location of screw driver adjustment controls.

above the incoming i-f carrier to produce a second intermediate frequency of 50 kc. This control is a coarse tuning adjustment, the final adjustment being made by means of the CHANNEL A, FINE TUNING control mounted on the converter front panel.

(d) C106. Capacitor C106 tunes the beat-frequency oscillator for channel B to 29.3 kc above the incoming i-f carrier to produce a second intermediate frequency of 29.3 kc. This control is a coarse tuning adjustment, the final adjustment being made by means of the CHANNEL B, FINE TUNING control mounted on the converter front panel.

16. Control Unit C–292/TRA–7

a. Front Panel Controls (fig. 14). (1) *AC SUPPLY switch.* The AC SUPPLY toggle switch, located at the lower left-hand corner of the control unit front panel, connects 115-volt, 60-cycle power to the control unit. With the switch in the ON position, the AC SUPPLY indicator lamp will glow.

(2) *RECEIVING TEST switches.* Two RECEIVING TEST push buttons are provided on the control unit front panel for use when testing and adjusting the receiving circuit in the control unit. When the SPACE push button is depressed, a steady space signal is transmitted through the receiving circuit of the control unit. When the MARK push button is depressed, a steady mark signal is transmitted through the receiving circuit.

(3) *SERVICE switch.* The three-position SERVICE switch determines the type of operation of the control unit. When used for one-way reversible operation, the switch is set at the ONE WAY position. When used for half-duplex or full-duplex operation, the switch is set at the HALF DX or FULL DX position respectively.

(4) *METER switch.* The eight-position METER switch is associated with the meter in the control unit front panel and connects the meter to the various circuits indicated by the switch settings (REC LINE CURRENT, REC EXT CURRENT, SEND EXT CURRENT, SEND LINE CURRENT, —150 VOLT SUPPLY, +300 VOLT SUPPLY, —300 VOLT SUPPLY, and BALANCE).

(5) *OPERATION switch.* The three-position OPERATION switch is set in the NORMAL or midposition for normal radioteletype operation. For emergency operation the equipment may be either hand keyed on a c-w basis (EMERG CW position) or on a frequency-shift basis (EMERG FS position).

(6) *EXTENSION CURRENT control.* The left-hand EXTENSION CURRENT control located below the panel meter is provided to adjust the extension loop current. The control adjusts the teletypewriter receiving loop current (REC EXT CURRENT meter reading) for full-duplex operation, and the teletypewriter sending loop current (SEND EXT CURRENT meter reading) for half-duplex or one-way reversible operation.

(7) *SENDING LINE CURRENT controls.* The SENDING LINE CURRENT, SPACE, and MARK controls are provided to adjust the spacing and marking signal currents in the transmitting loop to the frequency shift exciter unit.

(8) *TRANSMITTER switch.* The TRANSMITTER switch is provided to remotely control the radio transmitter from the control unit location. Throwing the TRANSMITTER switch to ON operates a relay in the frequency shift exciter unit, thereby preparing the transmitter for sending. For one-way reversible operation, throwing the TRANSMITTER switch to ON also operates a relay in the dual diversity converter unit, thereby disabling the radio receivers. The TRANSMITTER indicator lamp glows when the switch is in the ON position.

b. Controls Internal to Unit (fig. 15). (1) *BALANCE ADJ screw driver control.* The BALANCE ADJ control provides a means of balancing the mark and space potentials in the input circuits of the control unit receiving section.

(2) *—150V ADJ screw driver control.* The —150V ADJ control is provided to adjust the voltage of the —150-volt supply.

(3) *+300V ADJ screw driver control.* The +300V ADJ control is provided to adjust the voltage of the +300-volt supply.

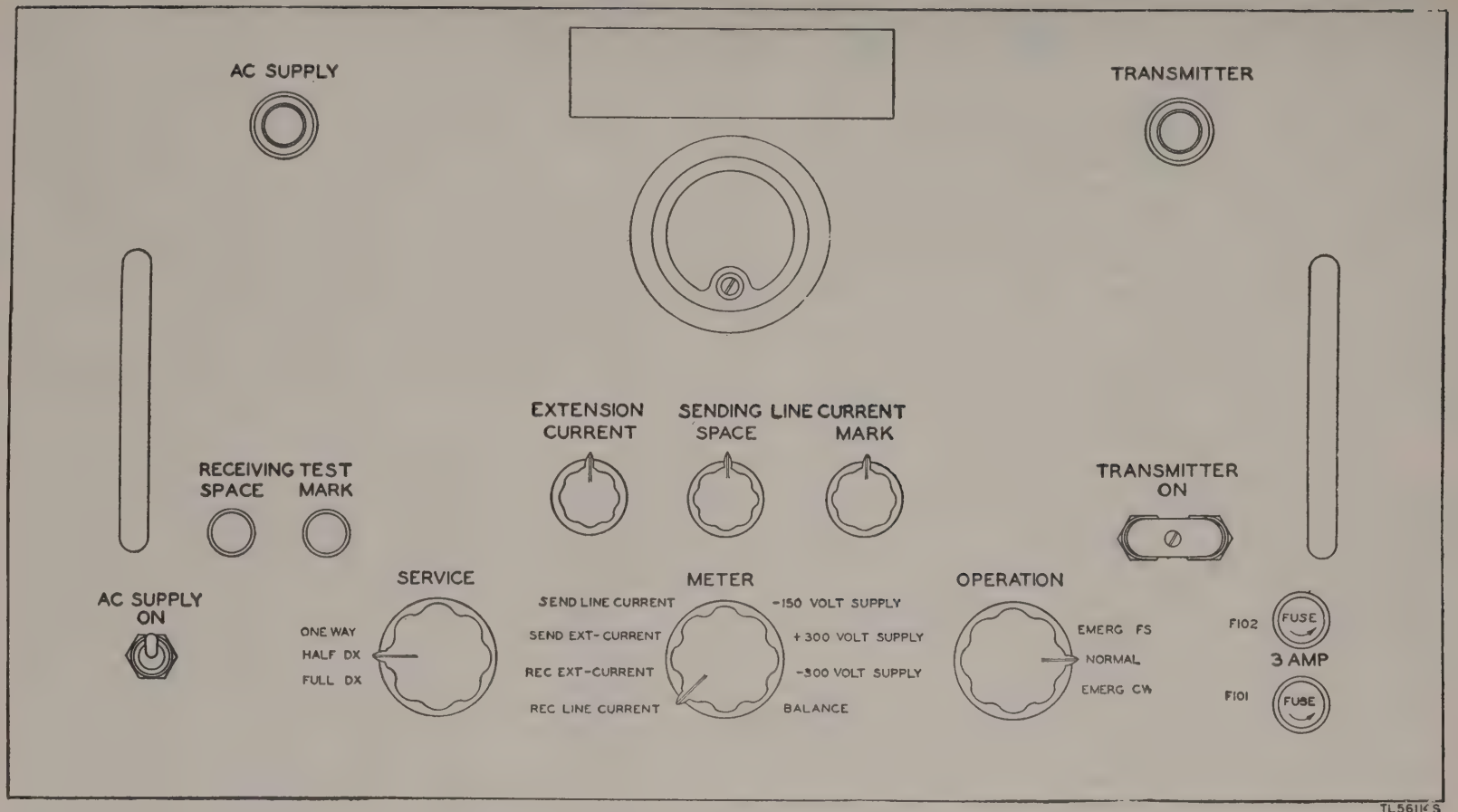

Figure 14. Control unit, location of front panel controls.

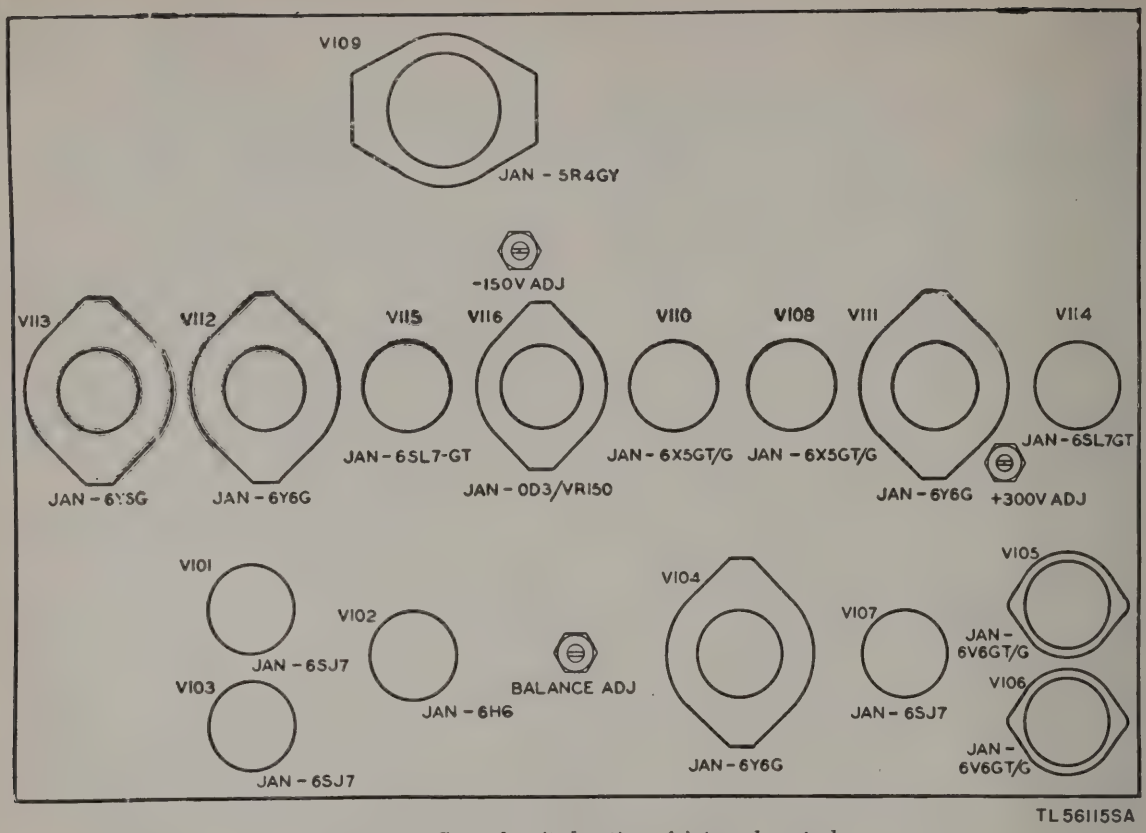

Figure 15. Control unit, location of internal controls.

Section IV. INITIAL ADJUSTMENT OF RADIO TELETYPE EQUIPMENT AN/TRA–7

17. General

a. The adjustment and operating instructions outlined in this and the following sections apply in particular to Radio Teletype Equipment AN/TRA–7 when it is used as a part of Radio Set AN/MRC–2. If the equipment is used with other radio sets, the instructions will apply only in general.

b. With the equipment installed and cabled properly in the three shelters, the radio set is ready for the initial adjustment operations. This section covers the initial adjustment of the transmitting, receiving, and operating equipment, respectively. The operations in this section may be performed simultaneously at the three shelters and the over-all operation of the radio set will be coordinated in section V.

18. Starting Procedure, Transmitting Equipment

a. Power Source. Check that a 115- to 120-volt, 60-cycle power source is available. Check that all power switches are in the off positions and that the TEST key on the exciter unit is at NORMAL. When operating as part of Radio SET AN/MRC–2, start Power Unit PE–95–( ) at the transmitting location by pressing the START button on Junction Box JB–70–A. If necessary, readjust the power unit output to obtain between 115 and 120 volts.

b. Frequency Shift Exciter. Throw the OVEN and AC SUPPLY switches on the front panel of the frequency shift exciter unit to the ON position at least 2 hours before beginning the initial adjustment operations. The OVEN and AC SUPPLY lamps should light.

Note. If emergency operation is required before the 2-hour period is completed, the transmitted frequency

must be checked every few minutes until a stable condition is noted. When a readjustment of the transmitted frequency is made, the receiving terminal at the other end of the circuit should be notified to avoid any interruption of service.

c. RADIO TRANSMITTER BC–610–( ) AND POWER AMPLIFIER AM–141/MRC. Make the initial setup for the transmitter and power amplifier necessary to prepare them for operation. These operations include adjustment and connection of antenna, approximate setting of dials and band change switches, and insertion of proper coils in accordance with tuning charts furnished with each of the equipments. (See TM 11–281 and 11–624.)

d. FREQUENCY METER BC–221–( ). Turn on Frequency Meter BC–221–( ) and, after a 10-minute warm-up period, calibrate and adjust it to the assigned transmitting frequency in the range (part of Frequency Meter Set SCR–211–( )) 2 to 18 mc.

Caution: Use the CHECK position for the calibration of the frequency meter only. Use the OPERATE position for the following initial adjustment of the frequency shift exciter.

19. Initial Adjustment of Frequency Shift Exciter

The frequency of the frequency shift exciter output must be either the same as one-half or one-quarter of the frequency of the assigned operating frequency of the radio transmitter as shown in table below.

Transmitter frequency (mc)	Multiplication factor	Exciter frequency (mc)	Frequency shift (cycles)
2 to 4	1	2 to 4	850
4 to 12	0.5	2 to 6	425
12 to 18	0.25	3 to 4.5	212.5

With the frequency to be transmitted known, determine the frequency range required for the frequency shift exciter and the required frequency shift from the above chart. The frequency shift of the mark and space signals must be reduced from 850 to 425 cycles when the frequency of the exciter is one-half (0.5) the assigned transmitter frequency, and to 212.5 cycles when the exciter frequency is one-quarter (0.25) of the assigned transmitter frequency. The frequency shift of the transmitted radio frequencies is always 850 cycles (when used with Radio Set AN/MRC–2).

a. Turn the OSCILLATOR RANGE knob on the frequency shift exciter to the frequency range acquired in accordance with the calibration chart which is located in the lid of the exciter.

b. Set the OSCILLATOR TUNING dial, the SHIFT dial, and the BUFFER TUNING dial to the required settings according to the calibration chart. (These are only approximate settings.)

c. Insert plug of the headset cord into PHONES 850 ∽ TEST jack on the exciter front panel, and set VOLUME controls of the frequency shift exciter and frequency meter to approximate midpoint positions.

d. Adjust the BUFFER TUNING dial to obtain maximum illumination on the BUFFER INDICATOR lamp.

e. Temporarily line up Radio Transmitter BC–610–( ) to the assigned operating frequency shift exciter in place of the transmitter oscillator. (See TM 11–624.)

f. Adjust the OSCILLATOR TUNING dial on the exciter front panel to obtain a zero beat in the headphones. Several weak beat signals may be heard, but the correct signal will be much stronger than the others. Check that the shadow on the 850 ∽ TEST INDICATOR tube is practically stationary or fluctuates very slowly at the zero beat point. When a large change in setting of the oscillator dial is required from that indicated on the chart, reset the BUFFER TUNING dial at the same time for maximum brilliancy.

g. Readjust the BUFFER TUNING dial to obtain maximum illumination on BUFFER INDICATOR, then lock the dial. Repeat procedures in *e* and *f* above.

h. Throw the TEST key to the SPACE position and the TEST OSC switch to the 850 ∽ position.

i. Adjust the SHIFT dial to obtain a zero beat between the two 850 ∽ tones. Check that the shadow on the 850 ∽ TEST indicator tube remains stationary or nearly so.

Note. It should not be necessary to move the SHIFT dial *more than a few divisions* from the position indicated on the calibration chart. A change of more than a few divisions may result in erroneous frequency shift.

j. Since any change in the setting of the

SHIFT dial will affect the oscillator frequency, it will be necessary to readjust the OSCILLATOR TUNING dial. Throw the TEST OSC switch to OFF and the TEST key to the MARK position, and readjust the OSCILLATOR TUNING dial as in *g* above. To prevent a frequency change when the dial lock is tightened, the final adjustment should be made with the lock partially tightened.

k. Throw the TEST key to the SPACE position and the TEST OSC switch to the 850 ∽ position and repeat the adjustment of the SHIFT dial as in *j* above. Restore the TEST key to the MARK position, and the TEST OSC switch to the OFF position.

l. Complete the tune-up operation of Radio Transmitter BC–610–( ) and Power Amplifier AM–141/MRC. (See TM 11–624.)

m. Recheck the adjustment of OSCILLATOR TUNING and SHIFT dials in accordance with procedures in *f*, *h*, and *i*, above. Restore the TEST key to the NORMAL position and the TEST OSC switch to the OFF position.

n. Communicate with the operating shelter and have the operator at that point throw the TRANSMITTER switch to the ON position. This should cause relay K101 in the frequency shift exciter to operate, the BUFFER INDICATOR lamp to light, and the P.A. PLATE meter in Radio Transmitter BC–610–( ) to indicate plate current.

o. Operate the TEST key on the frequency shift exciter to the SPACE position and have operator at the operating shelter send a space signal. Listen to the tone in the headset and then restore the TEST key to the NORM position. The tone in the headset should not change more than a few cycles. If the tone changes 850 ∽, reverse the leads at the LINE binding posts and again check the 850 ∽ tone.

20. Starting Procedure, Receiving Equipment

a. Power Source. Check that a 115- to 120-volt, 60-cycle power source is available. When operating Radio Set AN/MRC–2 start Power Unit PE–95–( ) associated with the receiving equipment according to instructions given in TM 11–904. If necessary, adjust the power unit to obtain an output of between 115 and 120 volts. If commercial power is used it may be necessary to change the taps on power transformer T302 in the dual diversity converter unit to compensate for a low or high source voltage.

b. Dual Diversity Converter CV–31/TRA–7. (1) Throw the AC SUPPLY toggle switch to the ON position. White-capped pilot lamp should light.

(2) Throw the PLATE toggle switch to the ON position. Red-capped PLATE pilot lamp should light.

(3) Turn the METER B switch to the following switch positions and observe the meter indications. The tolerances below are for the nominal a-c voltage (115 volts in Radio Set AN/MRC–2 equipment). If the a-c supply voltage changes from its nominal value, the tolerances are increased correspondingly. (See par. 111.)

Switch position	Meter indication
+275V	+45 to +70
REG +150V	+20 to +40
REG −150V	−20 to −40
−150V	−20 to −40
−400V	−65 to −95

21. Converter Output Circuit Adjustments

a. Set the OUTPUT switch on the converter to the MARK position, the DRIFT COMPENSATOR switch down, and the METER B switch to the NEUTRAL position.

b. Adjust the NEUTRAL OUTPUT control knob to give an indication of +60 on meter B. Change the OUTPUT switch to the SPACE position and check that meter B reads zero, then return the OUTPUT switch to the MARK position.

c. Set the MARK HOLD LEVEL control to the maximum clockwise position. This is the usual operating position except when one-way reversible operation is used as covered in paragraph 34*c*.

d. Set the METER B switch to the POLAR position and adjust the POLAR OUTPUT, MARK control knob to give an indication of +25 on meter B.

e. Set the OUTPUT switch to the SPACE position and adjust the POLAR OUTPUT, SPACE control knob to give an indication of −25 on meter B.

f. Throw the teletypewriter switch to ON, and check that the teletypewriter runs free when the OUTPUT SWITCH is on SPACE and holds when the OUTPUT switch is thrown to the MARK position.

g. Turn the BAND WIDTH switch to NARROW unless the drift compensator is used.

22. Adjustment of Input to Converter

The following initial adjustments must be made while receiving a test tape signal either from a distant station or from the local transmitting equipment when properly adjusted. This initial adjustment is also required whenever the operating frequency is changed.

a. Set the two Radio Receivers R–182 ()/MRC–2 to the correct band and approximate frequency to receive the distant station.

b. Set the METER B switch to the INPUT position and set the OUTPUT switch to the MARK position. Turn on the monitoring teletypewriter and check that the teletypewriter holds.

c. Set the OUTPUT switch to the SPACE position and check that the teletypewriter runs open. Return the OUTPUT switch to the MARK position.

d. Advance the VOL control on receiver A to maximum gain and the VOL control on receiver B to minimum gain.

e. Check on both receivers that the receiver power switch is on MVC; the C.W.–OSC. switch is OFF, and that the CRYSTAL PHASING control is turned fully clockwise to the OUT position. Adjust the ALIGN INPUT control on the receiver front panel to obtain maximum signal input on meter B on converter (when in input position) or maximum noise in speakers.

f. Tune in the distant station on receiver A. Use the c-w oscillator of the receiver if necessary to locate the station. Then turn the C.W.–OSC. switch to the OFF position and leave it off for all subsequent operations.

g. Adjust the VERNIER control of receiver A until the miscellaneous kicks on meter A center around zero, and the reading on meter B, showing the INPUT level, is a maximum.

h. Realign the ALIGN INPUT control so that a maximum input level is indicated on meter B of dual diversity converter. Readjust the ALIGN INPUT control for maximum input level on meter B.

i. Place the DRIFT COMPENSATOR switch in the converter to the out (down) position.

j. Set the OUTPUT control to NORMAL or REVERSE, depending upon the frequency band being used on the receivers. The three high-frequency (h-f) bands of Receiver R–182 ()/MRC–2 have the oscillator frequency of 470 kc below the frequency of the incoming carrier, while the three-low-frequency (l-f) bands have the oscillator frequency 470 kc above the incoming r-f carrier frequency. Therefore, it will be necessary to set the OUTPUT control at NORMAL or REVERSE, depending upon which band of the receiver is used and whether the drift compensator is in or out. The correct switch position may be obtained from the chart below, provided the frequency of the mark signal transmitted by the distant station is higher than the frequency of the space signal which is normal for Radio Set AN/MRC–2. If the mark frequency is lower than the frequency of the space signal, the transmitter keying lines at the distant station must be reversed.

Band	Frequency range (kc)	OUTPUT switch position		Meter A deflection
		DRIFT COMPENSATOR switch OFF	DRIFT COMPENSATOR switch ON	
A	1,500–3,000	REVERSE	NORMAL	right
B	3,000–5,000	REVERSE	NORMAL	right
C	5,000–8,000	REVERSE	NORMAL	right
D	8,000–11,000	NORMAL	REVERSE	left
E	11,000–14,000	NORMAL	REVERSE	left
F	14,000–18,000	NORMAL	REVERSE	left

k. Check that teletype signals are being received on the monitoring teletypewriter.

l. Repeat the above steps using receiver B and channel B. Turn the receiver B gain and reduce the receiver A gain to zero.

23. Starting Procedure, Operating Equipment

a. Power Source. Check that a 115- to 120-volt, a-c power source is available. When operating as part of Radio Set AN/MRC–2, start Power Unit PE–95–( ) associated with the operating equipment according to instructions given in TM–904. If necessary, adjust the power unit to obtain an output of between 115 and 120 volts.

b. Initial Setting of Controls on Con-

TROL UNIT C–292/TRA–7. (1) Turn the SERVICE switch on the control unit to the FULL DX position.

(2) Turn the OPERATION switch on the control unit to the NORMAL position.

(3) Turn the METER switch to the —150 VOLT SUPPLY position.

(4) Turn the EXTENSION CURRENT knob to its maximum counterclockwise position.

(5) Turn the SENDING LINE CURRENT, SPACE and MARK knobs to their maximum counterclockwise positions.

c. TURNING ON POWER. (1) Throw the AC SUPPLY toggle switch on the control unit to the ON position. The white AC SUPPLY indicator lamp should light.

(2) Throw the TRANSMITTER switch to the ON position. The green TRANSMITTER indicator lamp should light.

d. VOLTAGE CHECK. (1) With the METER switch in the —150 VOLT SUPPLY position, the meter should indicate —75 ±5 to the left of the center position. If the reading is not within these limits, raise the top cover on the control unit and adjust the slotted shaft —150V ADJ control to obtain the correct meter reading.

(2) Turn the METER knob to the +300 VOLT SUPPLY position. The meter should indicate +75 ±5 to the right of the center position. If the reading is not within these limits, raise the top cover on the control unit and adjust the slotted shaft +300 V ADJ control.

(3) Turn the METER knob to the —300 VOLT SUPPLY position. The meter should indicate —75 ±10 to the left of the center position. No adjustment of this supply is provided, and if the reading is not within these limits, see part five for trouble-shooting procedures.

24. Control Unit Initial Adjustment

a. RECEIVING TEST LOCAL. (1) Turn the METER knob to the REC EXT CURRENT position and momentarily depress the RECEIVING TEST, MARK key on the front panel of the control unit. Adjust the EXTENSION CURRENT knob until the meter indicates 75 to the right of the center position.

(2) Momentarily depress the RECEIVING TEST, SPACE key. The meter should indicate zero.

(3) Turn the METER switch to the SEND EXT CURRENT position and momentarily depress the RECEIVING TEST, MARK key. The meter should indicate 75 ±10 to the right of the center position.

(4) Turn the METER switch to the BALANCE position. Raise the lid on the control unit and adjust the BALANCE ADJ potentiometer while alternately depressing the RECEIVING TEST, and MARK keys until the meter indicates equally on either side of the zero position (between 70 and 80).

b. SENDING TEST LOCAL. (1) Turn the METER knob to the SEND LINE CURRENT position and adjust the SENDING LINE CURRENT, MARK control until the panel meter indicates 60 to the right of the center position.

(2) Depress the SEND-REC.-BREAK key on the sending teletypewriter to the BREAK position. Adjust the SENDING LINE CURRENT, SPACE knob until the panel meter indicates 75 to the left of the center position.

(3) Release the break key on the sending teletypewriter.

c. RECEIVING TEST SIGNALS FROM SHELTER. (1) Communicate with the operator at the receiving shelter and have the operator turn the OUTPUT knob to the MARK position.

(2) Turn the METER switch on the control unit to the REC LINE CURRENT position and check that the panel meter indicates between 50 and 85 to the right of the center position.

(3) Again communicate with the receiving shelter and have the operator turn the OUTPUT knob to the SPACE position.

(4) Check that the control unit panel meter indicates approximately the same to the left of the center point as in (2) above.

(5) If the meter indication in (2) and (4) above are not approximately the same, have the operator at the receiving shelter check and readjust the polar output observing the panel meter at the dual diversity converter in the receiving shelter.

Section V. FINAL ADJUSTMENT AND OPERATION

25. General

With the initial adjustment of the equipment

in the three shelters completed, the radio set will be ready for the final adjustment and coordination of the over-all system. Paragraphs 26 through 36 outline the procedure to be followed when coordinating the operation of the transmitting, receiving, and operating shelters.

26. Final Adjustment of Transmitting Shelter

a. Communicate with the operator at the operating shelter and have the operator transmit a mark signal. With the TEST key at NORM and TEST OSC switch at OFF position, readjust the OSCILLATOR TUNING dial until zero beat is heard in the headphones and is indicated by the 850 ∽ TEST indicator tube. (Do not retune BUFFER at this time.)

b. Throw the TEST OSC key to the 850 ∽ position and have the operator at the operating shelter send a space signal. Adjust the SHIFT dial until a zero beat is obtained between the two audio tones (850 ∽) and is indicated by the 850 ∽ TEST indicator tube.

c. Operate TEST OSC switch to OFF.

d. Communicate with operator at operating shelter and have operator send a mark signal. If zero beat is not heard in the headset, slightly readjust the OSCILLATOR TUNING dial to obtain a zero beat.

e. Repeat procedures in *b*, *c*, and *d* above until proper conditions are obtained.

27. Final Adjustment at Receiving Shelter

After the initial adjustments (pars. 17, 18, and 19) have been performed in the receiving shelter, the following tests should be made: (These tests should also be made whenever a local system test is desirable.)

a. Communicate with the operating shelter using the Telephone EE–8–( ) and check to make sure that the operator is ready to receive polar d-c signals for operation of the control unit and teletypewriters in the operating shelter.

b. Request that the operating shelter send RY tape signals to the transmitting shelter.

c. Tune in the local transmitter, sending RY tape signals, with receiver A and channel A of the converter in accordance with instructions given in paragraph 22.

d. Check the copy on the monitoring teletypewriter.

e. Request the operating shelter to send a mark signal (tape machine stopped).

f. Check neutral d-c loops as follows:

(1) Restore OUTPUT switch to either NORMAL or REVERSE positions as previously determined in *c* above.

(2) Turn the METER B switch to NEUTRAL.

(3) Adjust the NEUTRAL OUTPUT knob until Meter B indicates 60 to the right of zero.

g. Check polar d-c loop as follows:

(1) Turn the METER B switch to POLAR.

(2) Adjust the POLAR OUTPUT, MARK knob until Meter B indicates 25 to the right of zero.

(3) Turn the OUTPUT switch to SPACE.

(4) Adjust the POLAR OUTPUT, SPACE knob until Meter B indicates 25 to the left of zero.

(5) Restore OUTPUT switch to either NORMAL or REVERSE position.

h. Request the operating shelter to send tape signals and check the operating shelter teletypewriters for proper copy. Adjust the margin on the operating shelter teletypewriters if necessary.

i. Reduce the volume of receiver A to zero and tune in receiver B. Check that copy can be received on the monitoring teletypewriter and also at the operating shelter, using receiver B.

j. The system line-up at the receiving shelter is now finished. Stand by for orders from the operating shelter.

28. Tuning to Distant Transmitter Frequency

Upon proper orders, tune the receivers to the distant transmitter frequency.

a. Turn on the beat-frequency oscillator of the radio receiver for channel A and reduce the volume control of receiver B to minimum.

b. Tune in the desired station by ear; locate the signal at the center of the i-f pass band.

c. Turn off the beat-frequency oscillator of radio receiver A.

d. Reduce the volume of radio receiver A.

e. Slowly re-tune radio receiver A while observing meter A of the converter.

Note. The significance of the meter deflections with

respect to receivers having an h-f oscillator set above the carrier or set below the carrier is as follows:

Frequency of h-f oscillator	Meter deflection for a mark signal
Above carrier	To the right.
Below carrier	To the left.

f. Check that meter A deflects to the right and to the left of zero for miscellaneous keying signals, these deflections being of approximately equal plus and minus values when the receiver is correctly tuned.

g. If the distant station transmits a steady mark, tune receiver A until the meter deflection is approximately 50 (for a frequency shift of 850 cycles).

h. Turn down the volume of radio receiver A and increase the volume of receiver B.

i. Turn the METER B switch to CHAN B.

j. Tune radio receiver B following the same procedures as outlined above for receiver A.

k. Turn METER B switch to INPUT.

l. Adjust the volume of radio receiver B until meter B indicates about 100 to the right of zero.

m. Turn the METER B switch to CHAN B and note the reading of meter B.

n. Adjust the volume of radio receiver A until its output as indicated by meter A is equal to that of channel B.

Note. Carefully observe meters A and B since the meter deflections reveal the diversity effect of the two antennas if there is considerable fading.

Check that the sum of the two readings of the meters is about ±50 when a steady mark is transmitted, and that first one meter and then the other indicates a full mark deflection. Most of the output may be received at times on one receiver when keyed signals are received and quite often the mark signals are received over channel A and the space signals over channel B, or vice versa (meter needles operate in opposite directions). If the distant transmitter is sending signals, adjust the volume of receiver A to make the maximum swings of meters A and B equal.

o. Check that each meter averages near zero when signals are received over a considerable time.

29. Tuning Check During Normal Transmission

a. DURING PERIOD WHILE STEADY MARK IS TRANSMITTED. (1) Observe when a steady marking condition is being transmitted.

(2) Check that meters A and B on the dual diversity converter alternately deflect to full mark positions (approximately ±50).

(3) If meter A fails to reach a full mark position, make sure that the tuning is correct by reducing the volume of first receiver A and then receiver B. Adjust the volume of receiver A first above and then below its previous setting to cause the receiver to furnish its maximum output. Obtain the maximum output of receiver B in a similar manner.

(4) If either receiver A or B indicates a drift in frequency (meter A or B, with METER B knob on CHAN B, does not indicate +50), retune it carefully to obtain a normal steady marking output.

Note. Adjust the CHANNEL A (or CHANNEL B), FINE TUNING control of the converter to correct for small frequency drifts, particularly if the tuning adjustment of a receiver is found to be relatively coarse.

b. DURING PERIOD WHEN MISCELLANEOUS KEYING SIGNALS ARE TRANSMITTED. (1) The checks in (2) and (3) below are made by comparing the averages of meter indications.

(2) If fading is not severe enough to transfer the entire load at times to one receiver, raise and lower the volume of each receiver in turn and check that the outputs average zero. If necessary, re-tune the receivers to obtain an average zero output.

Note. Tune the receivers carefully to avoid sudden or large frequency changes which may result in false signals. If the i-f band pass is sharp, make sure that the tuning remains centered in the band.

(3) Adjust the CHANNEL A (or CHANNEL B), FINE TUNING control of the converter to correct for small frequency drifts, particularly if the tuning adjustment of a receiver is found to be relatively coarse.

(4) If fading is severe, do not change the volume control of either receiver a large amount. The changes in volume levels should only be sufficient to aid in re-tuning the receiver for an average zero output. See note in (2) above.

30. Adjustment of Output Control Circuit

a. DRIFT COMPENSATOR FEATURE DISCONNECTED. (1) The drift compensator feature need not be used if the i-f outputs of radio receivers A and B remain stable. A sufficiently stable output is indicated if it is not necessary to re-tune the receivers more often than once an hour.

(2) Do not use the drift compensator feature if weak r-f signals are received with prevailing high noise levels. Under these conditions, the outputs of the discriminators as shown by meter A and meter B (switched to CHAN B) seldom remain at values which can be read accurately on the meters. MAINTAIN ACCURATE TUNING AT THESE TIMES BY CONSTANTLY MONITORING THE OUTPUT OF THE CONVERTER.

(3) Check that the DRIFT COMPENSATOR is thrown to out (down) and that the AMP GAIN knob is not set beyond its mid-position.

(4) Turn the OUTPUT knob to the position which provides mark and space signals of proper polarities as indicated in the following table:

Deflection of meters A and B for a mark signal	Position of OUTPUT switch
Right	REVERSE.
Left	NORMAL.

(5) Set the METER B switch in position CHAN A+B.

(6) Check that the meter needle swings approximately equal distances to the right and left for steady mark and space signals, and fluctuates about zero on miscellaneous keying signals.

Note. The meter deflection should be approximately full scale to the right for a steady mark, if the telegraph signals are 850 cycles apart in frequency.

(7) Connect a headphone to the PHONES, KEYED TONE jack on the front panel, and verify that clear distinct tones are heard. Clear distinct tones indicate the absence of noise peaks or distortion arising from improper tuning.

b. DRIFT COMPENSATOR FEATURE CONNECTED. (1) Turn the DRIFT COMPENSATOR switch to the IN position.

(2) Turn the OUTPUT switch to a position which is opposite to that which is used when the drift compensator feature is disconnected, as follows:

Deflection of meters A and B for a mark signal	Position of OUTPUT switch
Right	NORMAL.
Left	REVERSE.

(3) Turn the METER B switch to position COMP AMP.

(4) Turn the AMP GAIN knob fully counterclockwise and then, when miscellaneous signals are being received, slowly turn the knob clockwise while observing meter B for a minimum of irregular deflections or kicks. On earlier equipments this setting is critical; it is normally near the maximum counterclockwise stop. In later equipments a tapered control is provided, and the normal setting will usually be 30° or 40° from the counterclockwise stop for 850-cycle frequency shift. Set the AMP GAIN knob in a position which provides a keyed tone output from the converter and results in minimum kicks on meter B. A more definite setting of the AMP GAIN knob may be found if the LIMITER knob is first turned fully clockwise.

(5) Turn the METER B switch to the CHAN A+B position.

(6) Verify that the deflection of meter B on a steady mark signal is 70 to the right of zero and, during a steady mark signal, reset the LIMITER knob to a position which causes the 70 indication to just start to decrease.

(7) Connect a headphone to the PHONES, KEYED TONE jack and verify that clear distinct tones are produced. Clear distinct tones indicate the absence of noise peaks or distortion arising from improper tuning.

31. Carrier-Control Mark-Hold Feature

The carrier-control mark-hold feature is provided to maintain a steady marking condition automatically if the transmitting station shuts down, or the carrier frequency disappears for any reason. It must be used in case of one-way reversible operation. For other types of operation, full-duplex or half-duplex, the carrier-control mark-hold feature is not required for operating reasons. If the mark-hold feature is not required, remove tube V105 from its

socket to allow converter operation at lower input levels. When the feature is used the following adjustments are made:

a. Turn the MARK HOLD LEVEL knob fully clockwise.

b. With the power at the distant transmitter off or with both receivers detuned from the signal, verify that a steady marking signal is connected to one of the associated d-c loops (the teletypewriter does not run open). Do not turn the receiver volume down for this test because total noise should be present.

Note. Occasional kicks may be transmitted if relatively high noise level prevails. In this case, slowly turn the MARK HOLD LEVEL knob counterclockwise until a steady marking signal is produced.

c. When carrier current is again received, verify that the setting in step *b* above is not such as to cause steady marking signals which interrupt normal keying.

d. Check the setting of the MARK HOLD LEVEL knob from time to time, since it is important to provide a setting which is as far clockwise as possible so that it does not interfere when receiving weak or fading r-f signals, and which also is enough counterclockwise to result in applying a steady marking signal when the carrier is disconnected. The setting of the control is subject to some change due to variable noise levels and different volume control adjustments of the associated receivers.

32. Procedures When Circuit Is in Use

a. Monitor the discriminator output from the converter at all times except when the noise level is high on meter A or meter B (with METER B switch to CHAN B). Adjust the receiver VERNIER control or the FINE TUNING control on the converter to keep the output balanced around zero. In case of high noise level, monitor the keyed tones.

Note. Keep the DRIFT COMPENSATOR switch down if the above adjustments are not required more than once an hour after allowing about a 2-hour warm-up period for the equipment. Use the drift compensator (IN position) if adjustments are frequently necessary even after a 2-hour warm-up period. Do not use the drift compensator feature on weak signal reception.

b. Continually monitor the input level on meter B of the converter (METER B switch on INPUT).

(1) The level should be above 15 even on extreme fades, preferably full scale at all times. If peaks of 100 cannot be obtained, turn the receiver volume to maximum.

(2) Operate both receivers simultaneously for dual diversity reception whenever practicable.

(3) Keep the ALIGN INPUT control on receivers A and B at the position which gives the maximum input on meter B (METER B switch on INPUT).

(4) Keep the C.W.-OSC. switch on receivers A and B at OFF except when using the loudspeaker or phones to listen for a distant station. *The C.W.-OSC. switch in the ON position may at times cause errors in the received copy.*

(5) Keep the CRYSTAL PHASING control on the radio receivers fully clockwise at all times.

(6) Keep the OFF-M.V.C.-A.V.C. switch on the receivers at M.V.C. at all times.

33. Final Check at Operating Shelter

This check is made at time of installation and whenever a local test of the system is required. If the distant terminal is not transmitting, check the operation of the equipment in the operating shelter as follows:

a. Communicate with the receiving shelter and have the operator tune the two radio receivers to the output of the local radio transmitter.

b. Transmit copy on the sending teletypewriter and check that it is received correctly on the receiving teletypewriter.

34. System Receiving and Transmitting Tests

Perform the operations outlined in *a*, *b*, and *c* below at time of installation of the equipment and perform the tests outlined in either *a*, *b*(1), or *c* at any time that the operating frequency is changed.

a. FULL-DUPLEX OPERATION. (1) With the distant terminal transmitting, have the operator at the receiving shelter tune the two receivers to the frequency of the distant radio transmitter.

(2) Communicate with the distant radio terminal and check that satisfactory two-way transmission is obtained.

b. HALF-DUPLEX OPERATION. (1) Communicate with the distant radio terminal on a full-duplex basis and have the operator at a stated time turn the SERVICE knob on the control unit to the HALF DX position. Turn the SERVICE knob on the local control unit to the HALF DX position at the stated time, and check that satisfactory two-way operation is obtained.

(2) Operate the break key on the sending teletypewriter and check that the break signal is received at the distant station.

(3) Have the distant terminal operate the break key on the sending teletypewriter and check that a break signal is received locally.

c. ONE-WAY REVERSIBLE OPERATION. (1) communicate with the distant radio terminal and have the operator at operating shelter turn the SERVICE knob on the control unit to the ONE WAY position at a stated time.

(2) Have operator at distant receiving shelter adjust the MARK HOLD LEVEL knob on the dual diversity converter in accordance with the procedure outlined in paragraph 31.

(3) Turn the SERVICE knob on the local control unit in the operating shelter to the ONE WAY position.

(4) Adjust the MARK HOLD LEVEL knob of the dual diversity converter at the local receiving shelter in accordance with the procedures outlined in paragraph 31.

(5) At the stated time, check the transmission in each direction.

Caution: With one-way operation, always operate the TRANSMITTER switch on the control unit to the off position (down) *as soon as you stop sending.*

35. Emergency Operation

a. EMERGENCY C–W TRANSMISSION FROM TRANSMITTING SHELTER. (1) At the transmitting shelter, insert the plug from the telegraph key into the KEY jack of Junction Box J–207/MRC–2 located under the frequency shift exciter unit.

(2) Operate the TEST key on the exciter front panel to MARK.

(3) Turn the transmitter power switch on Junction Box JB–70 to TRANS ON.

(4) Operate the EXCITER PLATE POWER switch on Radio Transmitter BC–610–( ) to ON, and the CW-PHONE switch to CW.

(5) Manipulate the telegraph key and observe that—

(*a*) The buffer indicator lamp lights when the telegraph key is depressed and goes out when the key is released.

(*b*) Normal current meter readings are indicated on the radio transmitter and power amplifier while the key is depressed.

Note. An audible check can be obtained by using the monitoring receiver, but in this case be sure that the REC-SEND switch on the receiver is on REC, or that the RECEIVER DISABLING switch on Junction Box JB–70 is OFF. Remove the antenna lead from the antenna binding post of the radio receiver to prevent damage to the receiver.

b. EMERGENCY C–W TRANSMISSION FROM RECEIVING SHELTER. (1) At the operating shelter, turn the OPERATION knob to EMERG CW. Operate the EE8 switch to COMBINED to connect the telephone sets at the three shelters together.

(2) Instruct the operator at the receiving shelter to turn the OUTPUT knob to SPACE.

(3) Instruct the operator at the transmitting shelter to establish the following conditions:

(*a*) Remove the plug from the KEY jack of Junction Box J–207/MRC–2 located under the frequency shift exciter unit.

(*b*) Set the TEST key on the exciter front panel to NORMAL.

(*c*) Turn the transmitter power switch on Junction Box JB–70 to TRANS ON.

(*d*) Operate the EXCITER PLATE POWER switch on Radio Transmitter BC–610–( ) to ON, and the CW-PHONE switch to CW.

(*e*) If the line circuit from the operating shelter to the transmitting shelter is not connected (or is open), connect a strap between the LINE binding posts at the transmitting shelter.

(4) Manipulate the telegraph key at the receiving shelter. At the transmitting shelter check that—

(*a*) The indications in *a*(5) (*a*) and (*b*) above are obtained.

(*b*) If the above indications are not obtained, reverse the control pair to the operating shelter.

c. EMERGENCY FREQUENCY-SHIFT TRANSMISSION FROM RECEIVING SHELTER. (1) Instruct the operator at the operating shelter to turn the OPERATION knob on the control unit to EMERG FS and the METER knob to SEND LINE CURRENT.

(2) At the receiving shelter, turn the OUTPUT knob on the dual diversity converter to SPACE and insert the plug from the telegraph key into the KEY jack. Hold the telegraph key depressed to transmit a mark signal.

(3) Check that meter B on the converter indicates 60 to the right (METER B switch in NEUTRAL position).

(4) Release the telegraph key to transmit a space signal.

(5) Check that meter B indicates 75 to the left.

36. Connection to Telegraph Equipment, External to Operating Shelter

a. GENERAL. When the d-c extension circuit of Control Unit C–292/TRA–7 is connected to telegraph equipment located external to the shelter, make connections and adjustments at the operating shelter according to *b* below and then follow instructions outlined in *c, d, e, f,* or *g* below depending on the type of operation and the type of equipment used.

b. ADJUSTMENTS AND CONNECTIONS AT OPERATING SHELTER. (1) Make the initial control unit adjustments as specified in paragraph 24.

(2) Remove all plugs from the SEND and REC extension jack box located between the sending and receiving teletypewriters.

(3) Remove strap wires A from binding posts 1 and 2, and from binding posts 3 and 4 on the terminal strip marked TO EXTERNAL TELEGRAPH EQUIPMENT.

(4) Connect strap wires B between binding posts 2 and T, and between binding posts 3 and R.

c. LINE UNITS BE–77–( ), FULL-DUPLEX OPERATION. (1) Turn the SERVICE switch on the control unit to FULL DX.

(2) Connect line (W–110–B) to binding post T and ground bus on the external telegraph terminals in the operating shelter.

(3) Connect the opposite ends of the line to the LINE and GND terminals on Line Unit BE–77–( ).

(4) Connect the d-c cord from the line unit to the d-c output of Rectifier RA–87.

(5) Connect the red and black plugs of the send teletypewriter cords into the red and black jacks on the line unit.

(6) Operate the switches on the sending line unit to RELAY in CIRCUIT and DISTANT CURRENT SUPPLY. Adjust the LINE RHEOSTAT for a reading of 60 milliamperes.

(7) Connect line (W–110–B) to binding post marked R and ground bus wing nuts on the external telegraph terminal in the operating shelter.

(8) Connect the opposite end of the line to the LINE and GND terminals on the receiving Line Unit BE–77–( ).

(9) Connect the d-c cord from the line unit into the d-c output of Rectifier RA–87.

(10) Connect the red and black plugs of the receiving teletypewriter cords to the red and black jacks on the line unit.

(11) Connect ground to the GND binding post of the line unit.

(12) Operate the switches in the receiving line unit to RELAY IN CIRCUIT and DISTANT CURRENT SUPPLY. Turn the LINE RHEOSTAT to the OUT position.

(13) In the operating shelter turn the meter switch on the control unit to REC EXT CURRENT and adjust the EXTENSION CURRENT knob for a meter indication of +75.

(14) Adjust the line unit bias with *repeat space* signals sent from the operating shelter at the other end of the radio link.

d. LINE UNIT BE–77–( ), ONE-WAY (HALF-DUPLEX) OPERATION. (1) Turn the SERVICE switch on the control unit to HALF DX.

(2) Connect line (W–110–B) to binding post marked T and ground bus wing nut on the external telegraph terminal in the operating shelter.

(3) Connect the opposite ends of the line to terminals marked LINE and GND on Line Unit BE–77–( ).

(4) Connect the d-c cord of the line unit to the d-c output of Rectifier RA–87.

(5) Connect the red and black plugs of the teletypewriter cords into the red and black jacks on the line unit.

(6) Connect ground to the GND binding post of the line unit.

(7) Operate the switches in the line unit to RELAY IN CIRCUIT and DISTANT CURRENT SUPPLY. Turn the LINE RHEOSTAT to the OUT position.

(8) In the operating shelter turn the METER switch to SEND EXT CURRENT and adjust the EXTENSION CURRENT knob for a meter indication of +75.

(9) Adjust the line unit bias with *repeat space* signals sent from the operating shelter at the other end of the radio link.

e. Repeater TG–30 (Terminal), One-way (Half-Duplex) Operation. (1) Turn the SERVICE switch on the control unit to HALF DX.

(2) Connect binding post T in the operating shelter to the LOCAL 1 binding post on Repeater TG–30.

(3) Operate the LOCAL switch on the repeater to position 2.

(4) Turn the METER switch on the control unit to SEND EXT CURRENT and adjust the EXTENSION CURRENT knob for a meter indication of +75.

f. Telegraph Terminal CF–2–( ) or CF–6, Full-Duplex Operation. (1) Turn the SERVICE switch on the control unit to FULL DX.

(2) Turn the LOOP knob of the telegraph terminal channel to be used to FULL DX—NEUTRAL TO NEG BAT.

(3) Connect binding post T in the operating shelter to the RL binding post on the telegraph terminal equipment.

(4) Connect binding post R in the operating shelter to the SL binding post on the telegraph terminal equipment.

(5) Adjust the RL RES and SL RES knobs on the telegraph terminal equipment for meter readings of 60.

(6) Adjust the telegraph terminal equipment for zero send bias while receiving *repeat space* signals from the operating shelter at the other end of the radio link.

g. Telegraph Terminal CF–2–( ) or CF–6, Half-Duplex Operation. (1) Turn the SERVICE switch on the control unit to HALF DX.

(2) Turn the LOOP knob on the telegraph terminal channel to be used to HALF DX—NEUTRAL TO NEG BAT.

(3) Connect binding post T in the operating shelter to the SL binding post on the telegraph terminal equipment.

(4) Adjust the SL RES knob on the telegraph terminal equipment for a meter reading of 60.

(5) Adjust the telegraph terminal equipment for zero send bias while receiving *repeat space* signals from the operating shelter at the other end of the radio link.

Section VI. EQUIPMENT PERFORMANCE CHECK LIST

37. Purpose and Use of Check List

a. General. The equipment performance check list (par. 38) will help the operator determine whether Radio Teletype Equipment AN/TRA–7 is functioning properly. The check list gives the items to be checked, the conditions under which the item is checked, the normal indications and tolerances of correct operation, and the corrective measures the operator can take. Check items 1 through 5 when starting, items 6 through 34 during operation, and items 35 through 39 when stopping (when turning the equipment off). Items 6 to 34 of this list should be checked at least once during a normal operating period or at least four times a day during continuous operation.

b. Action or Condition. For some items, the information given in the action or condition column consists of the settings of various switches and controls under which the item is to be checked. For other items it represents an action that must be taken to check the normal indication given in the normal indication column.

c. Normal Indications. The normal indications listed include the visible and audible signs that the operator will perceive when he checks the items. In the case of meter readings, the allowable tolerances of the readings are given. When a meter reads between the limits specified, operation can be considered satisfactory. A meter reading outside the limits given is a sign of impending trouble. If the indications are not normal, the operator should apply the recommended corrective measures.

d. Corrective Measures. The corrective measures listed are those the operator can make without turning the equipment in for repairs. When reference is made in the table to paragraph 70 through 113 it indicates that the trouble cannot be corrected during operation and that trouble shooting by an experienced repairman is called for. If the set is completely inoperative or if the recommended corrective measures do not yield results, trouble shooting is necessary. However, if the tactical situation requires that communication be maintained and if the set is not completely inoperative, the

operator must maintain the set in operation as long as possible.

e. ITEMS 1 TO 5. Items 1 to 5 should be checked each time the equipment is put into operation.

f. ITEMS 6 TO 13. These items represent a tuning check on the frequency shift exciter and should only be attempted during test periods. If the adjustment of these controls is found to be off, see paragraphs 19 and 26 for adjustment instructions.

g. ITEMS 14 TO 34. Items 14 to 34 show correct meter readings for the equipment when it is properly tuned and in operation.

Note. All readings are correct for input voltages of 115 volts. If the input voltage exceeds 115 volts, slightly higher readings may be expected. The corrective measures listed in the last column are to be performed if the readings for the various tests do not agree reasonably with the chart.

h. ITEMS 35 THROUGH 39. Items 35 through 39 are checked whenever the station is taken out of operation. Any abnormal indications at this time are probably caused by trouble in the set and should be corrected before the next expected period of operation.

38. Equipment Performance Check List

a. FREQUENCY SHIFT EXCITER O–39/TRA–7.

	Item No.	Item	Action or condition	Normal conditions	Corrective measures
START	1	AC SUPPLY and OVEN switches.	Throw to ON position at least 2 hours before the initial adjustment.	AC SUPPLY and OVEN indicator lamps light.	Check that Cord CX–292/TRA–7 is connected to AC SUPPLY socket.

b. DUAL DIVERSITY CONVERTER CV–31/TRA–7.

	Item No.	Item	Action or condition	Normal conditions	Corrective measures
START	2	AC SUPPLY switch.	Throw to ON position.	White-capped pilot lamp should light.	
	3	PLATE power switch.	Throw to ON position.	Red-capped pilot lamp should light.	

c. CONTROL UNIT C–292/TRA–7.

	Item No.	Item	Action or condition	Normal conditions	Corrective measures
START	4	AC SUPPLY switch.	Throw to ON position.	AC SUPPLY indicator lamp should light.	
	5	TRANSMITTER remote switch.	Throw to ON position.	Green TRANSMITTER indicator lamp should light.	

d. FREQUENCY SHIFT EXCITER O–39/TRA–7.

	Item No.	Item	Action or condition	Normal conditions	Corrective measures
EQUIP. PERF.	6	OSC. RANGE switch.	Set in accordance with calibration chart.		See paragraph 19 or 70 through 113.
	7	BUFFER TUNING control.	*a.* All dials and controls set in accordance with charts. *b.* TEST key set at MARK or SPACE. *c.* BUFFER TUNING dial rotated in either direction.	BUFFER INDICATOR lamp glows with maximum brilliancy when BUFFER TUNING dial is tuned to resonance.	See paragraph 19 or 70 through 113.

d. FREQUENCY SHIFT EXCITER O–39/TRA–7 (continued).

	Item No.	Item	Action or condition	Normal conditions	Corrective measures
EQUIPMENT PERFORMANCE		TEST key.	With transmitter lined up to exciter frequency and TRANSMITTER switch on control unit in ON position. *a.* Set on MARK. *b.* Set on SPACE. *c.* Set on NORMAL.	BUFFER INDICATOR lamp glows and normal meter readings are observed on the transmitter on all three positions.	See paragraph 19 or 70 through 113.
	9	Headset.	With plug inserted into PHONES jack, VOLUME control set to mid position, TEST OSC, switch set to ON position.	850-cycle tone heard in phones.	See paragraph 19 or 70 through 113.
	10	TEST OSC. switch.	Throw to ON position.	850-cycle tone heard in phones.	See paragraph 19 or 70 through 113.
	11	VOLUME control.	Rotate in either direction.	Level of 850-cycle tone will vary.	See paragraph 19 or 70 through 113.
	12	OSCILLATOR TUNING control.	*a.* TEST OSC. switch in OFF position. *b.* TEST key in MARK position. *c.* Frequency meter set to assigned frequency. *d.* Rotate OSCILLATOR TUNING dial in either direction.	Beat note obtained in phones when exciter oscillator is tuned to operating frequency.	See paragraph 19 or 70 through 113.
	13	SHIFT dial.	*a.* TEST OSC. switch in ON position. *b.* TEST key in SPACE position. *c.* Rotate SHIFT dial very slightly in either direction.	A second audio tone heard with 850-cycle tone. Second tone varies in frequency as SHIFT dial is adjusted, and zero beat is obtained when properly adjusted. This point is also indicated on 850 TEST INDICATOR tube by minimum flutter.	See paragraph 19 or 70 through 113.

e. DUAL DIVERSITY CONVERTER CV–31/TRA–7.

	Item No.	Item	Action or condition	Normal conditions	Corrective measures
EQUIP. PERF.	14	—400-volt supply.	METER B switch in —400V position.	Meter B indicates between —65 and —95 microamperes.	See paragraphs 70 through 113.
	15	—150-volt supply.	METER B switch in —150V position.	Meter B indicates between —20 and —40 microamperes.	See paragraphs 70 through 113.
	16	Regulated —150-volt supply.	METER B switch in REG —150V position.	Meter B indicates between —20 and —40 microamperes.	See paragraphs 70 through 113.

e. DUAL DIVERSITY CONVERTER CV–31/TRA–7 (continued).

	Item No.	Item	Action or condition	Normal conditions	Corrective measures
EQUIPMENT PERFORMANCE	17	Regulated +150-volt supply.	METER B switch in REG +150V position.	Meter B indicates between +20 and +40 microamperes.	See paragraphs 70 through 113.
	18	+275-volt supply.	METER B switch in +275V position.	Meter B indicates between +45 and +70 microamperes.	See paragraphs 70 through 113.
	19	Input signal.	METER B switch in INPUT position.	Peak indication on meter B of +100.	Increase receiver volume.
	20	Neutral loop current.	METER B switch in NEUTRAL position.	Meter B indicates +60 (0.060 amps) for mark signals; 0 for space signals.	Adjust NEUTRAL OUTPUT control.
	21	Polar loop current.	METER B switch in POLAR position.	Meter B indicates +25 (0.025 amps) for mark signals; −25 for space signals.	Adjust POLAR OUTPUT, MARK and SPACE controls.
	22	Channel A + B signal.	METER B switch in CHAN A + B position.	Drift compensator out: meter B indicates +100 (mark) and −100 (space). Drift compensator in: meter B indicates +70 (mark) and −70 (space).	Adjust DRIFT COMPENSATOR, LIMITER control.
	23	Output of channel B discriminator.	METER B switch in CHAN B position, receiver A volume reduced.	Meter B indicates ±50 for steady mark signal (850-cycle shift), averages 0 for miscellaneous signals.	Check tuning of CHANNEL B, FINE TUNING control, tuning of receiver B, or frequency shift of transmitter.
	24	Output of channel A discriminator.	Receiver B volume reduced.	Meter A indicates ±50 for a steady mark signal (850-cycle shift), averages 0 for miscellaneous signals.	Check tuning of CHANNEL A, FINE TUNING control, tuning of receiver A, or frequency shift of transmitter.
	25	Diversity output of channel A and B discriminators.	METER B switch in CHAN B position.	Reading of meter A will exceed reading of meter B about 50 percent of the time when steady mark signal is received, sum of meter A and B readings will be approximately 50.	
	26	Drift compensator circuit.	METER B switch in COMP AMP position. LIMITER control in full clockwise position.	Minimum kicks on meter B while receiving signals.	Adjust AMP GAIN control for minimum meter kicks.

f. CONTROL UNIT C–292/TRA–7.

	Item No.	Item	Action or condition	Normal conditions	Corrective measures
	27	—150-volt supply.	METER switch in —150 VOLT SUPPLY position.	Meter indicates —75 ±5 microamperes.	Adjust —150V ADJ control on top of chassis.
E	28	+300-volt supply.	METER switch in +300 VOLT SUPPLY position.	Meter indicates +75 ±5 microamperes.	Adjust +300V ADJ control on top of chassis.
Q	29	—300-volt supply.	METER switch in —300 VOLT SUPPLY position.	Meter indicates —75 ±10 microamperes.	See paragraphs 70 through 113.
U I P M E N T	30	Balance circuit.	METER switch in BALANCE position alternately depress RECEIVING TEST, MARK and SPACE buttons.	Equal indications (approximately 75) on each side of zero.	Adjust BALANCE ADJ control on top of chassis.
	31	Sending line current.	METER switch in SEND LINE CURRENT position, send mark and space signals alternately from sending teletypewriter.	Meter reading of +60 (20 ma) for mark signals, and —75 (25 ma) for space signals.	Adjust SENDING LINE CURRENT, MARK and SPACE controls.
	32	Sending extension current.	METER switch in SEND EXT CURRENT position.	Meter indicates +75 (60 ma) ±10.	See paragraphs 70 through 113.
P	33	Receiving extension current.	METER switch in REC EXT CURRENT position.	Meter indicates +75 (60 ma) for full-duplex operation, and 0 for half-duplex operation.	Adjust EXTENSION CURRENT control.
E R F O R M A N C E	34	Receiving line current.	METER switch in REC LINE CURRENT position, operate RECEIVING TEST, MARK and SPACE keys in turn.	Meter reading of +75 (25 ma) ±10 for mark signals, and —75 (25 ma) ±10 for space signals when length of connecting line between control unit and converter is short. Meter reading of +60 (20 ma) ±10 for mark signals, and —60 (20 ma) ±10 for space signals when converter and control unit are separated by 10 miles.	See paragraphs 70 through 113.

g. FREQUENCY SHIFT EXCITER O–39/TRA–7.

	Item No.	Item	Action or condition	Normal conditions	Corrective measures
S T O P	35	AC SUPPLY and OVEN switches.	Throw to off (down) position.	AC SUPPLY and OVEN indicator lamps go out.	

h. DUAL DIVERSITY CONVERTER CV–31/TRA–7.

	Item No.	Item	Action or condition	Normal conditions	Corrective measures
S T O P	36	PLATE power switch.	Throw to off (down) position.	Red-capped pilot lamp goes out.	
	37	AC SUPPLY switch.	Throw to off (down) position.	White-capped pilot lamp goes out.	

i. CONTROL UNIT C–292/TRA–7.

	Item No.	Item	Action or condition	Normal conditions	Corrective measures
S T O P	38	TRANSMITTER remote switch.	Throw to off (down) position.	Green TRANSMITTER indicator lamp goes out.	
	39	AC SUPPLY switch.	Throw to off (down) position.	AC SUPPLY indicator lamp goes out.	

PART THREE
MAINTENANCE INSTRUCTIONS

Section VII. PREVENTIVE MAINTENANCE TECHNIQUES

39. Meaning of Preventive Maintenance

Preventive maintenance is a systematic series of operations performed at regular intervals on equipment, when turned off, to eliminate major break-downs and unwanted uninterruptions in service, and to keep the equipment operating at top efficiency. To understand what is meant by preventive maintenance, it is necessary to distinguish preventive maintenance from trouble shooting and repair. The prime function of preventive maintenance is to prevent break-downs and, therefore, the need for repair. The prime function of trouble shooting and repair is to locate and correct *existing* defects. The importance of preventive maintenance cannot be overemphasized. A system of radio communication depends upon readiness and operating efficiency of each item of equipment when it is needed. It is vitally important that the radio operators and repairmen maintain their sets and teletype equipment properly.

Note. The operations in paragraph 39 through 65 are first and second echelon (organization operators and repairmen) maintenance. Some operations in paragraphs 66 through 69 are high echelon maintenance.

40. Description of Preventive Maintenance Techniques

a. GENERAL. (1) Most of the electrical parts used in Radio Teletype Equipment AN/TRA–7 require routine preventive maintenance. Some parts require more maintenance than others. Some require maintenance of a different kind. Because hit-or-miss maintenance techniques cannot be applied, definite and specific instructions are needed. This section contains these specific instructions to guide personnel assigned to perform the six basic maintenance operations Feel, Inspect, Tighten, Clean, Adjust, and Lubricate. Throughout this manual the lettering system for the six operations will be as follows:

F—Feel
I—Inspect
T—Tighten
C—Clean
A—Adjust
L—Lubricate

(2) The first two operations show when the other four are needed. Selection of operations is based on a knowledge of field needs. For example, dust encountered on dirt roads during cross-country travel filters into equipment no matter how much care is taken to prevent it. Rapid changes in weather (such as heavy rain followed by blistering heat), excessive dampness, snow, and ice tend to cause corrosion of exposed surfaces and parts. Without frequent inspections and the necessary tightening, cleaning, and lubricating, equipment becomes undependable and may break down when it is needed most.

b. FEEL. The Feel operation is used most often to check rotating machinery, such as blower motors and drive motors, also to determine whether electrical connections and bushings are overheated. Feeling will show the need for lubrication or the existence of other defects requiring correction. The maintenance man must become familiar with the normal operating temperatures of motors, transformers, and other parts, to recognize signs of overheating.

Note. It is important to perform the Feel operation as soon as possible after shut-down and always before any other maintenance is done.

c. INSPECT. Inspection is the most important operation in preventive maintenance. A careless observer will overlook evidences of minor trouble. Although these defects may not at the moment interfere with performance of the equipment, valuable time and effort can be saved if they are corrected *before* they lead to major break-downs. To be able to recognize the signs of a defective set, make every effort to become thoroughly familiar with the

indications of *normal* functioning. Inspection consists of *carefully* observing all parts of the equipment, noticing their color, placement, state of cleanliness, moisture accumulations, etc. Inspect for the following conditions:

(1) Overheating, as indicated by discoloration, blistering, or bulging of the parts or surface of the container; leakage of insulating compounds; and oxidation of metal contact surfaces.

(2) Placement, by observing that all leads and cabling are in their original positions.

(3) Cleanliness, by carefully examining all recesses in the units for accumulation of dust, especially between connecting terminals and binding posts. Parts, connections, and joints should be free from dust, corrosion, and other foreign matter. In tropical and high-humidity locations, look for fungus growth, mildew, and moisture accumulations.

(4) Tightness, by testing any connection or mounting which appears to be loose.

d. TIGHTEN, CLEAN, AND ADJUST. These operations are self-explanatory. Specific procedures to be followed in performing them are given wherever necessary throughout part three.

Caution: Screws, bolts, and nuts should not be tightened carelessly. Fittings tightened beyond the pressure for which they are designed will be damaged or broken. Whenever a loose connection is tightened, it should be moisture-proofed and fungiproofed again by applying the varnish with a small brush. (See par. 69.)

e. LUBRICATE. Lubrication refers to the application of grease or oil to the bearings of motors or rotating shafts. It may also mean the application of a light oil to door hinges or other sliding surfaces on the equipment. When lubrication is required see paragraphs 66 through 68.

41. Vacuum Tubes

Note. Do not work on tubes immediately after shutdown. Severe burns may result from contact with envelopes of hot tubes.

a. INSPECT (I). (1) Inspect glass and metal tube envelopes, tube caps, and tube connector clips for accumulation of dirt and for corrosion. Tubes with loose plate caps, grid caps, or envelopes should be replaced if possible.

(2) Examine the spring clips that make contact with the grid and plate caps for corrosion and for loss of tension with resulting looseness. Check the condition of wires soldered to the spring clips. The wires should be free from frayed insulation or broken strands.

(3) Inspect the firmness of tubes in their sockets. Make inspection by pressing tubes down in sockets and testing them in that position, *not* by partially withdrawing the tubes and jiggling them from side to side. Movement of a tube tends to weaken the pins in the base and unnecessarily spread the contacts in the socket. Inspect tube sockets at the time tubes are removed.

(4) Be careful when removing a tube from its socket, especially if it is a high-power tube. Never jar a warm tube. Always remove connections to the grid caps and plate caps.

b. TIGHTEN (T). Tighten all loose connections to the tube sockets or to the tubes. If the connections are dirty or corroded, clean them before tightening. When tightening locknuts that hold the sockets to insulated bushings, do not apply excessive pressure. Too much pressure will crack the bushings.

c. CLEAN (C). (1) Clean the tubes, if necessary. Tubes operated at high voltages and with exposed plate and grid connections must be kept free of dirt and dust because of possible leakage between grid and plate terminals. In contract, tubes operating at low voltages and not having exposed grid and plate caps do not require frequent cleaning. However, do not permit dirt to accumulate on low-voltage tubes.

(2) Remove dust and dirt from glass or metal envelopes with a clean, lint-free, dry cloth. If proper care is used, the grid and plate caps may be cleaned with a piece of #0000 sandpaper by wrapping the paper around the cap and *gently* rubbing the surface. Excessive pressure is not needed. It is not necessary to grip the cap tightly. Wipe the cap with a clean dry cloth.

(3) When tube sockets are cleaned and the contacts are accessible, fine sandpaper may be used to remove corrosion, oxidation, and dirt.

d. ADJUST (A). Adjust loose tube connector clips. Do not flatten tube connector clips during adjustment. Flattened clips do not make adequate contact with the surface of the tube cap. If clip is made of thin metal, it can be

adjusted by gently compressing it with the fingers. If it is made of heavy-gauge metal, suitable pressure can be applied with a pair of long-nose pliers.

42. Capacitors

a. INSPECT (I). (1) Inspect the terminals of large fixed capacitors for corrosion and loose connections. Carefully inspect mountings to discover loose mounting screws, studs, or brackets. Examine the leads for poor insulation, cracks, and evidences of dry rot. Cut away frayed strands on insulation. If wire is exposed, wrap it with friction tape. See that the terminals of capacitors are not cracked or broken.

(2) Thoroughly inspect the case of each large fixed capacitor for leaks, bulges, and discoloration.

(3) Inspect the plates of variable capacitors for dirt, dust, or lint. Examine the movable set of plates for signs of damage or misalignment that would cause them to touch the fixed plates during tuning. Rotate the movable plates, using the panel tuning control, and thus check for proper operation of the capacitor.

b. TIGHTEN (T). Tighten loose terminals, mountings, and connections on capacitors, when necessary. Do not break the bushing or damage the gasket.

c. CLEAN (C). (1) Clean the cases of fixed capacitors, the insulated bushings, and all connections that are dirty or corroded. Capacitor cases and bushings can usually be cleaned with a dry cloth. However, if deposit of dirt is hard to remove, moisten the cloth in dry-cleaning solvent.

(2) Clean the plates of variable capacitors with a small brush or pipe cleaner, removing all dust and lint. Dust, if present, may cause arcing.

d. LUBRICATE (L). See paragraphs 66 through 68.

43. Inductors

a. INSPECT (I). Inspect all inductors for general cleanliness. Look for poor or loose connections at the terminals. Check for loose or shorted turns, charred insulation, and charred or blistered forms.

b. TIGHTEN (T). Tighten all loose connections. In tapped inductances with screw connections to the taps, be careful not to tighten the screws too tightly as damage to the turns of the inductors will result.

c. CLEAN (C). Clean inductors with a soft brush. Use #0000 sandpaper to remove corrosion from the terminals. Be careful to avoid damaging the turns of the inductor.

44. Resistors

a. GENERAL. Various types of resistors are used in Radio Teletype Equipment AN/TRA–7. The connections to the various resistors are either of the pigtail, solder-lug, or ferrule type.

b. INSPECT (I). Inspect the coating of vitreous-enameled resistors for signs of cracks and chipping, especially at the ends. Examine the bodies of all types of resistors for blistering, discoloration, and other indications of overheating. Inspect leads and all other connections for corrosion, dirt, dust, looseness, and broken strands in the connecting wires. Check security of all mountings. Do not attempt to move resistors with pigtail connections, because there is danger of breaking the connections at point where they enter body of resistor. Such defects cannot be repaired.

c. TIGHTEN (T). Tighten resistor connections and mountings whenever they are loose. If a resistor remains loose, vibration may break the connection or damage the body. Use only rosin-core solder for making repairs.

d. CLEAN (C). (1) Clean all carbon resistors with a small brush.

(2) The vitreous-enameled resistors must be kept clean to avoid leakage between the terminals. Wipe them with a dry cloth. However, if the dirt deposit is unusually hard to remove, use dry-cleaning solvent (SD).

(3) Resistors with discolored bodies cannot be cleaned. Discoloration indicates that there has been overloading and overheating at some time prior to the inspection. The discoloration is probably due to circuit trouble which requires analysis and correction. Trouble-shooting procedures are described in paragraphs 70 through 113.

45. Fuses

a. GENERAL. Fuses used in Radio Teletype Equipment AN/TRA–7 are those with a glass case. The glass case fuse is easily removed for inspection. See that the fuse ends and holding

clips are kept clean and tight. If they are not, arcing and burning will occur and make the replacement of the complete holder necessary. Fuses should be thrown away when they blow.

b. INSPECT (I). Inspect fuse caps for evidence of burning, charring, and corrosion; fuse clips for dirt, loose connections, and loss of tension.

c. TIGHTEN (T). Tension of fuse clips may be increased by pressing sides closer together. If necessary, use a pair of pliers to adjust tension.

d. CLEAN (C). Clean fuse ends and fuse clips with emery cloth. Wipe them with a clean cloth. When using a file to remove deep pits on the clips, fuse ends, or contacts, always finish up with crocus cloth to leave a smooth contact surface. As a final step, wipe the surface with a clean dry cloth.

46. Relays

A relay is considered normal if exterior is free from dirt or dust; contacts are not burned, pitted, or corroded; contacts are lined up and correctly spaced; moving parts travel freely and function in a satisfactory manner; connections to the relay are tight; wire insulation is not frayed or torn; relay assembly is securely mounted; and field coil shows no sign of overheating.

a. INSPECT (I). (1) Inspect relay for defects. Contacts may be examined with the aid of a flashlight and mirror.

(2) Check mechanical action of relays to make certain that when the moving and stationary contacts come together they make positive contact and are directly in line with each other.

b. TIGHTEN (T). Tighten all loose connections and mounting screws, but do not apply enough force to damage screws or to break the parts they hold.

c. CLEAN (C). (1) *Relay exterior.* Brush exterior with a soft brush. If connections are dirty or corroded, remove the leads and clean them. Replace carefully.

(2) *Relay Contacts.* (*a*) Before removing covers of relays, see that all apparatus is free from dust, dirt, or other foreign matter which might fall into relay contacts.

(*b*) Remove loose dust or lint from relay and relay contacts with a soft-bristle brush.

(*c*) Inspect relay contacts thoroughly. If they are dirty, burned, pitted, or corroded, service them as in ((*d*) through (*g*) below).

Note. The brown discoloration found on silver or silver-plated contacts is silver oxide and is a good conductor. It should not be removed unless the contacts must be cleaned for some other reason. It may be removed at any time either by burnishing or with a cloth moistened with carbon tetrachloride.

(*d*) To clean contacts, insert a clean flat blade in the burnishing tool (Tool, switchboard, contact burnisher, WECo 265C, Signal Corps stock No. 6R41065C). Keep the blade clean by frequent wiping with a lint-free cloth moistened with carbon tetrachloride. To burnish normally open contacts, press them together with the orange stick (or suitable substitute) or operate the relay manually to give a slight pressure against the blade of the burnisher. At the same time move the blade back and forth two or three times or as often as necessary to brighten the contacts. Avoid excessive burnishing. When too much of the contact metal is removed, the contact follow is destroyed and readjustment is necessary. When burnishing normally closed contacts, the tension of the springs themselves will usually supply enough pressure against the burnisher. If the spring tension is heavy, lift one of the springs away sufficiently to insert the burnisher.

(*e*) If burnishing does not eliminate contact trouble use carbon tetrachloride to clean contact surfaces more thoroughly. Dip the flat end of a clean toothpick into carbon tetrachloride. Then, holding the contacts slightly separated, deposit the liquid on the contacts without rubbing. Use the flat end of another toothpick to deposit more carbon tetrachloride on the contact to flush away dirt loosened by the first application. Again do not rub. Be careful to keep carbon tetrachloride from all insulating materials. When the contacts are thoroughly dry, burnish them ((*d*) above) to remove all deposit or residue. Always burnish contacts after cleaning with carbon tetrachloride.

(*f*) Contact points which are badly pitted or built up may be reconditioned as follows: Remove the build-ups with a fine-cut point file (or in emergencies crocus cloth). Burnish the pits with the ball-point burnisher blade furnished

with the switchboard contact burnishing tool. If the pit is small, place the ball point of the burnisher in the pit and rotate the barrel of the tool between the thumb and finger, at the same time applying slight pressure. If the pit is large, move the ball point of the burnisher over the surface of the pit with a circular motion. After removing build-ups and cleaning pits, again burnish the contacts with a flat blade of the contact burnisher. Always be careful to avoid excessive removal of the contact metal. Otherwise contact follow and separation requirements will be affected and readjustment will be necessary.

Caution: Never use highly abrasive material, such as sandpaper or emery cloth, to clean relay contacts.

(*g*) Relay pole faces and armature faces must be cleaned occasionally. These are the surfaces of the core and armature which touch each other when the relay operates. Need for cleaning is indicated by a tendency to stick during operation. Clean with a burnisher and carbon tetrachloride, or use the following method: Insert a strip of hard-finish bond paper between the armature and the core. Lightly press the armature against the core and withdraw the paper. Repeat with clean paper until it shows no evidence of dirt.

Caution: Do not use paper to clean relay contacts. Minute burs on the contact surface may retain fine shreds of paper and cause faulty contact.

47. Switches

a. INSPECT (I). (1) Inspect mechanical action of each switch and, while so doing, look for signs of dirt or corrosion on all exposed elements. In some cases it will be necessary to examine the elements of the switch visually. In others, the action of the switch is checked by flipping the control knob or toggle, or pressing switch button and noting freedom of movement and amount of spring tension.

(2) Examine ganged switches to see that they are properly lubricated and that the contacts are clean. Inspection is visual. Do not pry leaves of the switch apart. Rotary members should make good contact with stationary members; and as the former slides into the latter, a spreading of the stationary contact leaves should be visible. Switch action should be free. Wiping action of contacts usually removes any dirt at point of contact.

b. TIGHTEN (T). Tighten all loose mounting nuts and screws. Tighten loose connections. If a soldered connection is poor or loose, resolder this connection, using rosin-core solder only.

c. CLEAN (C). Clean exterior surface of switches with a stiff brush, moistened with dry-cleaning solvent (SD).

d. LUBRICATE (L). See paragraphs 66 through 68.

48. Coils

a. INSPECT (I). Inspect coils for cleanliness of the ceramic coil form and secureness of mounting supports. Check all connections and sliding chips for proper contact and spring tension.

b. TIGHTEN (T). Tighten any loose coil mounting or connections by resoldering wires or tightening screws.

c. CLEAN (C). Clean the coil form and coil with a soft brush. Remember the ceramic coil form is actually performing the function of a high-voltage insulator. Therefore, the same preventive maintenance will apply to the coil as to high-voltage insulators and bushings. Clean sliding contacts with crocus cloth when corroded.

49. Rheostats and Potentiometers

a. INSPECT (I). (1) Inspect the mechanical condition of rheostats. The arm should be keyed tightly to the shaft, and the shaft should turn easily in the bushing which supports it.

(2) Inspect the assembly and mounting screws, setscrews, and nuts.

(3) Examine the insulating body of the rheostat for dust, dirt, cracks, and chipped places.

(4) Examine all metallic parts for dust, dirt, and corrosion.

b. TIGHTEN (T). Tighten loose assembly or mounting screws.

c. CLEAN (C). (1) Clean exposed contact surfaces of rheostat and connections whenever they are dirty or corroded.

(2) Remove grease and dirt from rheostat parts with carbon tetrachloride.

(3) If contact surfaces are corroded, clean them with crocus cloth.

(4) Clean contact surface of the arm by in-

serting a strip of crocus cloth between the arm and the rheostat winding and drawing cloth back and forth.

(5) Clean body of rheostat or potentiometer with a brush or cloth.

50. Terminal Blocks

a. INSPECT (I). (1) Inspect terminal blocks for cracks, breakage, dirt, loose connections, and loose mounting screws.

(2) Carefully examine connections for mechanical defects, dirt, and corrosion.

b. TIGHTEN (T). Tighten loose screws, lugs, and mounting belts. When tightening screws, be sure to select a screw driver of correct size. Do not exert too much pressure. Tighten loose connections.

c. CLEAN (C). Clean terminal blocks, when they require it, with a dry brush. When necessary use a cloth moistened with dry-cleaning solvent (SD). Thoroughly wipe block with a cloth and then brush it to remove any lint.

51. Multiple Connectors

Multiple connectors and plugs are used to interconnect the various components of the teletype equipment.

a. INSPECT (I). Inspect female ends of the connectors for corrosion and collected dust. Inspect mountings for cracks and loose connections. Inspect the male ends for loose and broken pins and for proper spring in the banana plugs.

b. CLEAN (C). Clean male and female ends of the connectors with a brush moistened in carbon tetrachloride. Remove corrosion with #0000 sandpaper. Wipe with a clean cloth.

52. Cords and Cables

The cables in Radio Teletype Equipment AN/TRA–7 are the life lines of the equipment. Closely observe condition of cabling. Operating equipment in all kinds of weather, and moving it on all kinds of roads, punishes cabling severely.

a. INSPECT (I). Inspect cables for cracked or deteriorated insulation, frayed or cut insulation at connecting and supporting points, and improper placement which strains cables or connections. Also watch for kinks and improper supports.

b. TIGHTEN (T). Tighten loose cable clamps, coupling rings, and cable connections.

c. CLEAN (C). Clean connections on cables when they are dirty or corroded. Clean corroded connectors with #0000 sandpaper. Clean entire surface of connector. Make no attempt to remove individual prongs from cable plugs.

53. Meters

Meters are extremely delicate instruments and must be handled carefully. They require very little maintenance. They are precision instruments and ordinarily cannot be repaired in the field.

a. INSPECT (I). Inspect leads and connections of meters. Look for loose, dirty, and corroded connections. Look for cracked or broken cover glasses. Since the movement of a meter is extremely delicate, its accuracy will be seriously affected if the glass is broken and dirt and water filter through.

b. TIGHTEN (T). Tighten all connections found loose. Any loose meter wires should be inspected for dirt or corrosion before they are tightened. The tightening of meter connections requires a special technique because careless handling can easily crack the meter case.

c. CLEAN (C). Meter cases can usually be cleaned with a dry cloth. If cleaning is difficult, dampen the cloth with dry-cleaning solvent (SD). Clean dirty connections with a small brush dipped in dry-cleaning solvent (SD), or with a small piece of cloth dipped in solvent.

d. ADJUST (A). Normally, meters in Radio Teletype Equipment AN/TRA–7 should indicate zero when the equipment is turned off. Before deciding that a meter needs readjusting, tap the meter case *lightly* with the tip of one finger. This will help the needle to overcome the slight friction which sometimes exists at the bearings and prevents an otherwise normal unit from coming to rest at zero. If adjustment is needed, insert the tip of the thinnest screw driver available into the slotted screw head located below the meter glass and *slowly* turn the adjusting screw until the pointer centers at zero when viewing the meter face and pointer *full on* and not from either side.

54. Pilot Lamps

Pilot lamps are used to indicate when power

has been applied to a circuit. They are easily removed and replaced.

a. INSPECT (I). Inspect pilot-lamp assemblies for loose lamps, loose mounting screws, and loose, dirty, or corroded connections.

b. TIGHTEN (T). (1) Tighten loose mounting screws and resolder any loose connections. If connections are dirty or corroded, clean them before soldering.

(2) Screw loose lamps tightly into their sockets.

c. CLEAN (C). Clean pilot-lamp reflector glass. Wipe dust from pilot lamps. Remove corrosion from pilot-lamp contacts with #0000 sandpaper.

55. Jacks and Plugs

Jacks require very little attention, and then only at infrequent intervals. Occasionally it will be necessary to tighten the mounting nut, clean contacts, or increase spring tension. Remove dirt with a brush and carbon tetrachloride. Remove corrosion with a piece of crocus cloth followed by a clean cloth. Increase spring tension, when necessary. Try the action of the jack after each adjustment. Be sure to keep all soldered connections intact. To clean dirty or corroded telephonetype plugs, use paste metal polish (Signal Corps stock No. 6G1516). After cleaning, use carbon tetrachloride to remove all remaining traces of polish. Finish off with a clean dry cloth.

56. Cabinets, Chassis, and Mountings

The cabinets which house the various components of Radio Teletype Equipment AN/TRA–7 are constructed of sheet steel, coated with black crackle-finish enamel.

a. INSPECT (I). Inspect outside and inside of each cabinet thoroughly, paying strict attention to every detail. Check ventilator mountings, panel screws, and zero settings of meters. Examine pilot-lamp covers for cracks and breaks. Inspect panels for loose knobs, switches, and jacks. Examine air filter for dirt.

b. CLEAN (C). Clean each cabinet, outside and in, with a clean dry cloth. Use dry compressed air to blow out all accumulated dirt and dust. If air filters cannot be cleaned with compressed air, replace them with clean filters.

Caution: Take care when handling spun-glass air filter; try to keep small glass splinters from entering the fingers. Repaint any surface that is scratched, rusted, or chipped.

c. TIGHTEN (T). Tighten all loose mounting bolts, panel screws, plugs, and control knobs.

57. Coupling Shafts and Control Knobs

Capacitors, switches, and resistors in this set are controlled through coupling shafts which connect these items to control knobs on the front panels. Keep these shafts and control knobs tight at all times.

a. INSPECT (I). Inspect all rotating shafts for corrosion.

b. CLEAN (C). Remove all dirt and rust from the rotating shafts with a clean dry cloth. Rust and corrosion should not be permitted to accumulate. Remove all corrosion and rust with #0000 sandpaper.

c. LUBRICATE. See paragraphs 66 through 68.

58. Power Transformers and Filter Chokes

Since power transformers and filter chokes used in Radio Teletype Equipment AN/TRA–7 are of similar potted construction, preventive maintenance for them is similar.

a. FEEL (F). As soon as possible after shut-down, feel filter chokes for abnormal heating which may indicate an overload or imminent failure due to moisture absorption or other causes.

b. INSPECT (I). Inspect power transformers and filter chokes for signs of blistering, bulging, or leakage of tar or insulating compounds. Inspect for external signs of electrolytic action or corrosion.

c. TIGHTEN (T). Tighten all mounting bolts or screws, but not to the point that threads are destroyed. The securing of such heavy parts as transformers and chokes to the chassis is very important in preventive maintenance. Should a heavy filter choke or transformer break loose from its mounting in vehicular use or in transit, it may smash tubes, variable capacitors, coils, and resistors, and at the same time sever a large number of connections.

d. CLEAN (C). Clean power transformers and filter chokes with a dry cloth. Be sure that

no dirt, lint, threads, or foreign material is present between terminals. Dirt, lint, and thread absorb moisture which may provide a leakage path for high voltages between these terminals.

Section VIII. ITEMIZED PREVENTIVE MAINTENANCE

59. Introduction

For ease and efficiency of performance, preventive maintenance on Radio Teletype Equipment AN/TRA–7 will be broken down into operations that can be performed at different time intervals. In this section the preventive maintenance work to be performed on the radio set at the specific time intervals is broken down into units of work called "items". The general techniques involved and the application of the FITCAL operations in performing preventive maintenance on individual parts are discussed in paragraphs 39 through 58. These general instructions are not repeated in this section. When performing preventive maintenance, see paragraphs 39 through 58 if more information is required for items 1 through 4. (See pars. 61 through 64.) Perform all work with the power removed from the equipment. After preventive maintenance has been performed on a given day, put the equipment into operation and check it for satisfactory performance. (See par. 38.)

60. Preventive Maintenance Tools and Materials

The following preventive maintenance tools and materials will be needed:

Common hand tools
Clean cloth
#0000 sandpaper
Emery cloth
Camel's-hair brush
Paste Metal Polish (Signal Corps stock No. 6G1516)
Set of socket wrenches
Set of end wrenches
Bristo setscrew wrench
Contact burnishing tool (Signal Corps stock No. 6R41065C

Note. Gasoline will not be used as a cleaning fluid for any purpose. Solvent, Dry Cleaning, is available as a cleaning fluid through established supply channels. Oil, Fuel, Diesel may be used for cleaning purposes when dry-cleaning solvent (SD) is not at hand. Carbon tetrachloride will be used as a cleaning fluid only in the following cases: where inflammable solvents cannot be used because of the fire hazard, and for cleaning electrical contacts including relay contacts, plugs, commutators, etc.

61. Item 1. Cords and Cables

OPERATIONS

ITC Cords and cables
ITC Multiple connectors.

62. Item 2. Dual Diversity Converter CV–31/TRA–7

PRELIMINARY STEPS. Disconnect the power cable and other cables from the converter unit. Remove the converter chassis from the cabinet and place on its side. Remove the cover plate from the bottom of the chassis.

OPERATIONS

ITC Vacuum tubes
ITC Capacitors
ITC Resistors
ITC Inductors
ITC Terminal strips
ITC Chassis and mounting
ITC Pilot lights
ITC Jack
FITC Power transformers
ITCA Relay
IC Meters
IT Knobs and controls
ITC Switches
ITC Rheostats and potentiometers
IT Couplings

63. Item 3. Control Unit C–292/TRA–7

PRELIMINARY STEPS. Disconnect the power cable and other cables from the control unit. Remove the control unit chassis from the cabinet and place on its side. Remove the cover plate from the bottom of the chassis.

OPERATIONS

ITC Vacuum tubes
ITC Capacitors
ITC Resistors
ITC Chassis and mounting
ITC Pilot lights

FITC Power transformers
ITC Meters
IT Knobs and controls
ITC Switches
ITC Rheostats and potentiometers

64. Item 4. Frequency Shift Exciter O–39/TRA–7

PRELIMINARY STEPS. Disconnect the power cable and other cables from the exciter unit. Remove the exciter unit chassis from the cabinet and place on its side. Remove the cover plates from the bottom of the chassis.

OPERATIONS

ITC Vacuum tubes
ITC Capacitors
ITC Resistors
ITC Inductors
ITC Terminal strips
ITC Chassis and mounting
ITC Pilot lights
ITC Jack
FITC Power transformers
ITCA Relay
IC Meters
IT Knobs and controls
ITC Switches
ITC Rheostats and potentiometers
IT Couplings
ITL Vernier knobs

65. Preventive Maintenance Check List

The following check list is a summary of the preventive maintenance operations to be performed on Radio Teletype Equipment AN/TRA–7. The time intervals shown on the check list may be reduced at any time by the local commander. For best performance of the equipment, perform operations at least as frequently as called for in the check list. The echelon column indicates which operations are first echelon maintenance and which operations are second echelon maintenance. Operations are indicated by the letters of the word FITCAL. For example, if the letters ITCA appear in the operations column, the item to be treated must be inspected (I), tightened (T), cleaned (C), and adjusted (A).

Section IX. LUBRICATION

66. Approved Lubricants

The table below lists the lubricating materials necessary in servicing Radio Teletype Equipment AN/TRA–7.

Symbols	Standard nomenclature
PS	Oil, Lubricating, Preservative, Special
GL	Grease, Lubricating, Special
SD	Solvent, Dry Cleaning

67. Lubrication Instructions

a. GENERAL. This equipment is extremely accurate and sensitive, and must be handled as carefully as any precision instrument. No attempt should be made by the operator to disassemble for lubrication.

Note. Intervals given are maximums for 8-hour-day operation. For abnormal conditions or activities, intervals should be shortened accordingly.

b. LUBRICATION INTERVAL. Every 3 months, or more often, if conditions warrant, remove all switch and control knobs and apply one or

Item No.	Operations	Item	When performed			
			Before operation	Daily	Weekly	Echelon
1	ITC	Cords and cables		X		1st
2	FITCA	Dual Diversity Converter CV–31/TRA–7			X	1st and 2d
3	FITC	Control Unit C–292/TRA–7			X	1st and 2d
4	FITCAL	Frequency Shift Exciter O–39/TRA–7			X	1st and 2d

Note. X indicates when operations are to be performed.

F	I	T	C	A	L
Feel	Inspect	Tighten	Clean	Adjust	Lubricate

two drops of special preservative lubricating oil (PS) on exposed shaft bearings. Lubricate all door hinges, fasteners, and slides with one or two drops of special preservative lubricating oil (PS). Wipe off excess.

Caution: Do not allow oil to run into the electrical contacts of switches and relays, since a film of oil may cause series damage or poor contact.

c. FREQUENCY SHIFT EXCITER O–39/TRA–7. Lubricate lightly with special lubricating grease (GL) the shafts of the vernier drives and the edges of the vernier drive friction disks. These vernier drives are associated with the OSCILLATOR TUNING, BUFFER TUNING, and SHIFT capacitors which are component parts of Frequency Shift Exciter O–39/TRA–7.

68. Higher Echelon Lubrication

Lubricate equipment after disassembly by higher echelon.

a. Clean and apply one or two drops of special preservative lubricating oil (PS) to all tuning and switch shaft bearings. Wipe off excess. Do not disturb the adjustment of any interior trimmer capacitors, and avoid moving wires, since displacement may necessitate complete recalibration.

b. Clean and apply a thin film of special lubricating grease (GL) to the worm and gear teeth of the main tuning capacitor of Frequency Shift Exciter O–39/TRA–7.

Section X. MOISTUREPROOFING AND FUNGIPROOFING

69. Moistureproofing and Fungiproofing

Moistureproofing and fungiproofing treatment has been applied to this equipment during manufacture. If re-treatment is necessary, return the equipment to fourth or fifth echelon repair. Only these echelons have the facilities for the complex readjustment and testing of this equipment after treatment. See TB SIG–13 for details of moistureproofing and fungiproofing.

PART FOUR
AUXILIARY EQUIPMENT

(Not used)

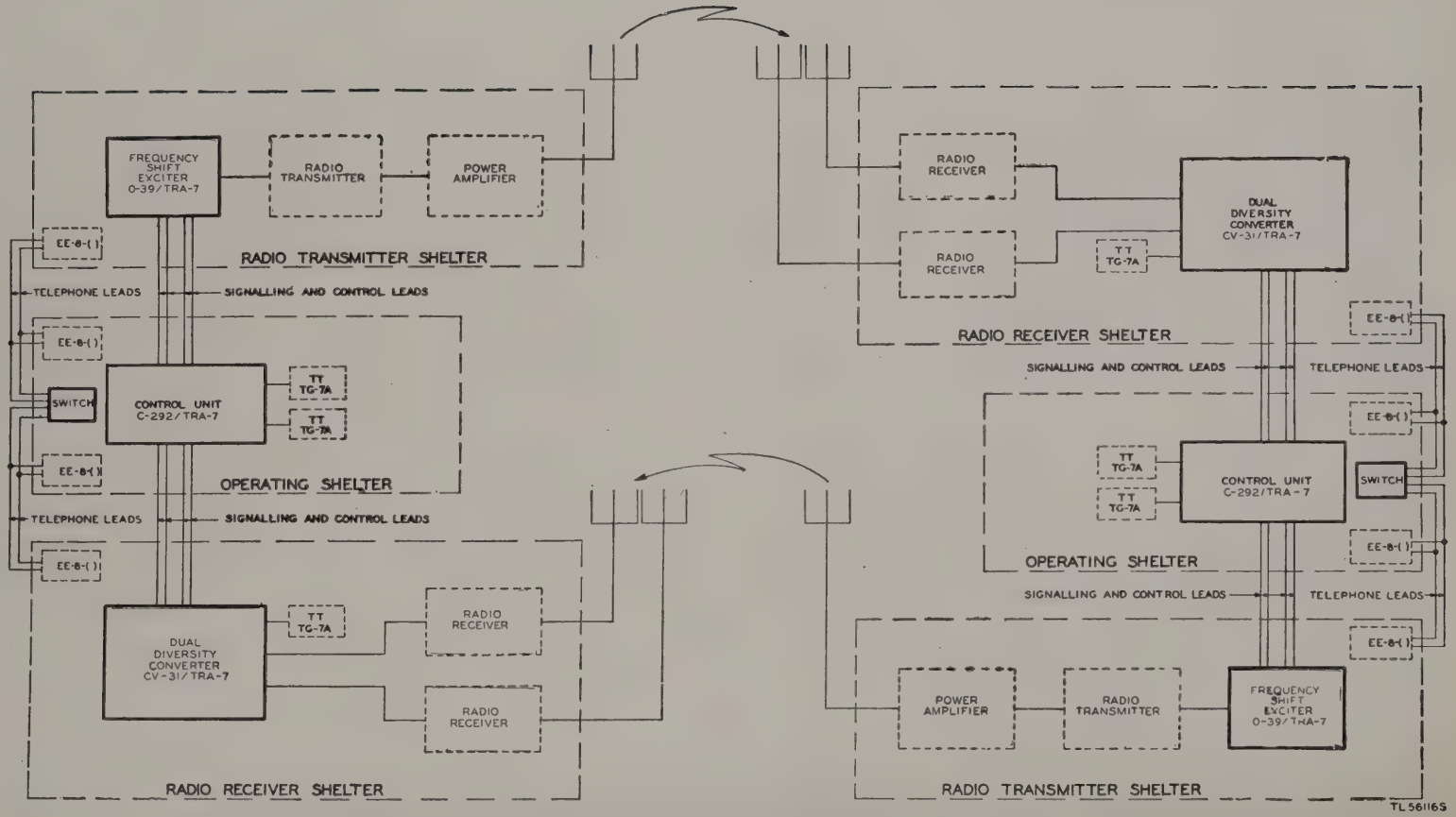

Figure 16. Block diagram of two radio terminals arranged for full-duplex

PART FIVE
REPAIR INSTRUCTIONS

Note. Failure or unsatisfactory performance of equipment used by Army Ground Forces will be reported on WD AGO Form 468 (Unsatisfactory Equipment Report); by Army Air Forces, on Army Air Forces Form 54 (Unsatisfactory Report). If Form 54 is not available, prepare the data according to the sample form shown in figure 60.

Section XI. THEORY OF EQUIPMENT

70. Simplified Block Diagram

a. Figure 16 is a block diagram of the equipment at two radio terminals. The blocks shown in solid lines at each terminal comprise Radio Teletype Equipment AN/TRA–7. The diagram shows a sending and receiving teletypewriter at each terminal (operating shelter) for full-duplex operation. Telegraph signals may, however, be originated with a telegraph key or a tape transmitter. The receiving station may be equipped to receive keyed tones or neutral signals which may be copied by ear or automatically recorded on a typing reperforator.

b. Opening and closing of the sending relay contacts at the teletypewriter station causes signals which are transformed electronically by three tubes in the control unit to polar d-c signals. The polar signals are transmitted over a field-wire line to control the operation of a diode tube in the frequency shift exciter which in turn controls the mark and space frequencies of the transmitted radio signals. During the mark intervals, the radio transmitter operates on the normal assigned frequency of 2 to 18 mc. During the space intervals, the transmitter frequency is reduced by 850 cycles.

c. At the receiving station, duplicate incoming r-f signals are received on two different antennas spaced several wavelengths apart. The use of two antennas and two associated radio receivers minimizes the effects of selective fading which tends to weaken some frequencies and not others. The transmission paths to each antenna will not be affected simultaneously to the same extent. At the receiving shelter each antenna is connected to a

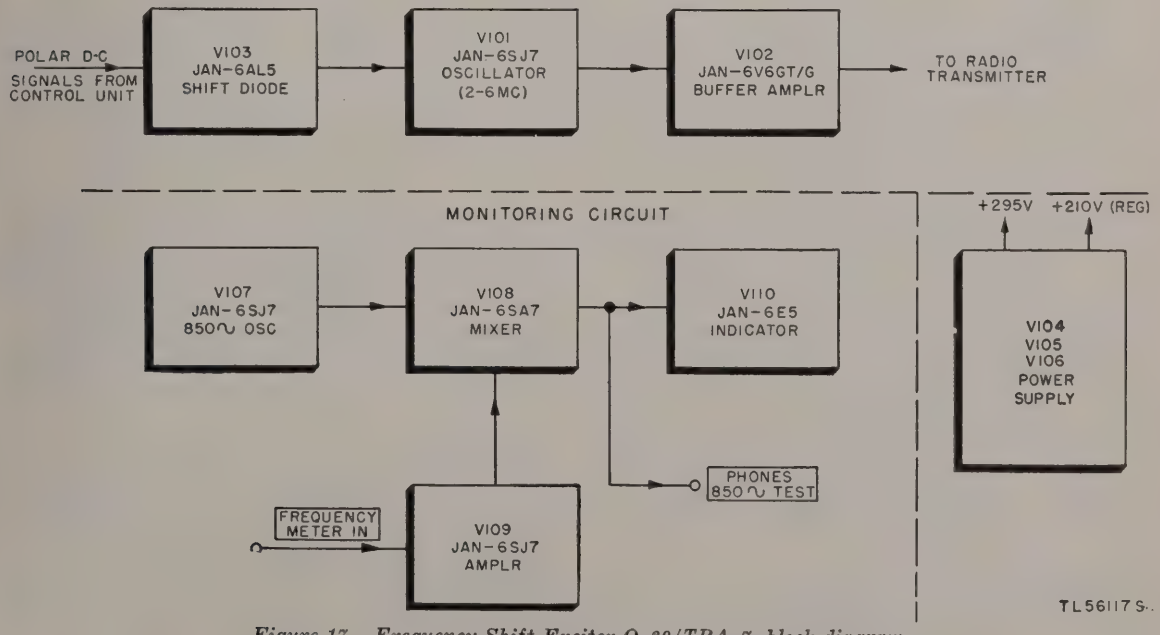

Figure 17. Frequency Shift Exciter O–39/TRA–7, block diagram.

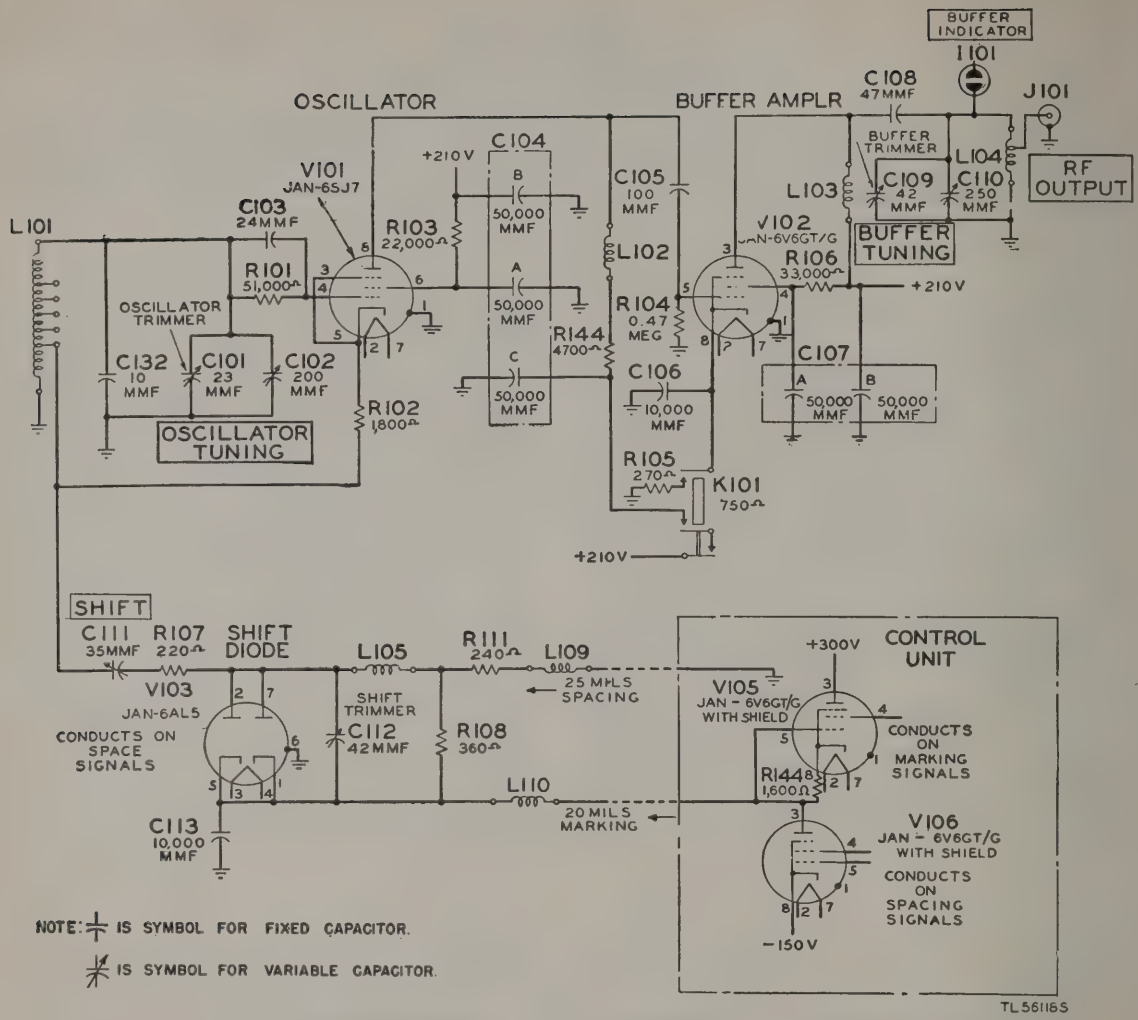

Figure 18. Frequency shift exciter oscillator, amplifier, and keying circuit, simplified schematic diagram.

radio receiver and their i-f outputs are applied to the dual diversity converter. In this unit the i-f signals are converted to lower frequencies which in turn are demodulated by two frequency discriminating networks to reproduce the original polar and neutral d-c telegraph signals. These resulting signals operate a monitoring teletypewriter.

Section XII. THEORY OF FREQUENCY SHIFT EXCITER

71. General

The component circuits of Frequency Shift Exciter O–39/TRA–7 are shown in block diagram form (fig. 17) and consist of an oscillator circuit, an amplifier circuit, a keying circuit, a power supply, and a monitoring circuit for checking the frequency of the oscillator. A schematic diagram of the frequency shift exciter circuit is shown in figure 17.

72. Oscillator Circuit (fig. 18)

The oscillator consists primarily of tube V101, a Tube JAN–6SJ7 high-gain pentode, in a modified Hartley circuit. When relay K101 is operated, tube V101 starts to conduct since a 210-volt positive potential is applied to the

plate of tube V101 through coil L102 and resistor R144. Since the screen grid is connected to B+ through 22,000-ohm resistor R103 and the control grid is at a higher potential than the cathode, biasing the tube for conduction, the tube will oscillate. Coil L101 and capacitors C101, C102, and C132 form a resonant circuit which is tuned to a frequency of from 2 to 6 megacycles. Resistor R101 and capacitor C103 provide an operating bias for the oscillator tube. The developed frequency of the oscillator is used for marking signals and is reduced by 212.5, 425, or 850 cycles for spacing signals, depending on the multiplying factor of the transmitter. This reduction in frequency is obtained when tube V103, of the keying circuit, conducts. When this tube conducts, a path to ground is established from the SHIFT tuning capacitor C111 through resistor R107, tube V103, and capacitor C113.

73. Amplifier Circuit (fig. 18)

The output of the oscillator is applied to the control grid of buffer-amplifier tube V102, JAN–6V6GT/G pentode amplifier, through capacitor C105. When relay K101 is operated, the cathode of tube V102 is connected through R105 to ground. Capacitor C106 is the cathode bypass capacitor. Inductor L103 forms the plate load for the amplifier and the screen-grid voltage is dropped to its proper operating value through resistor R106, bypassed to ground by capacitor C107A. The output of buffer-amplifier tube V102 is connected to Radio Transmitter BC–610–( ) through coupling capacitor C108, jack J101, and a 6-foot length of coaxial cable. A tuned circuit consisting of coil L104 and capacitors C109 and C110 is also connected across the output circuit of tube V102 and is tuned to the oscillator frequency to ob-

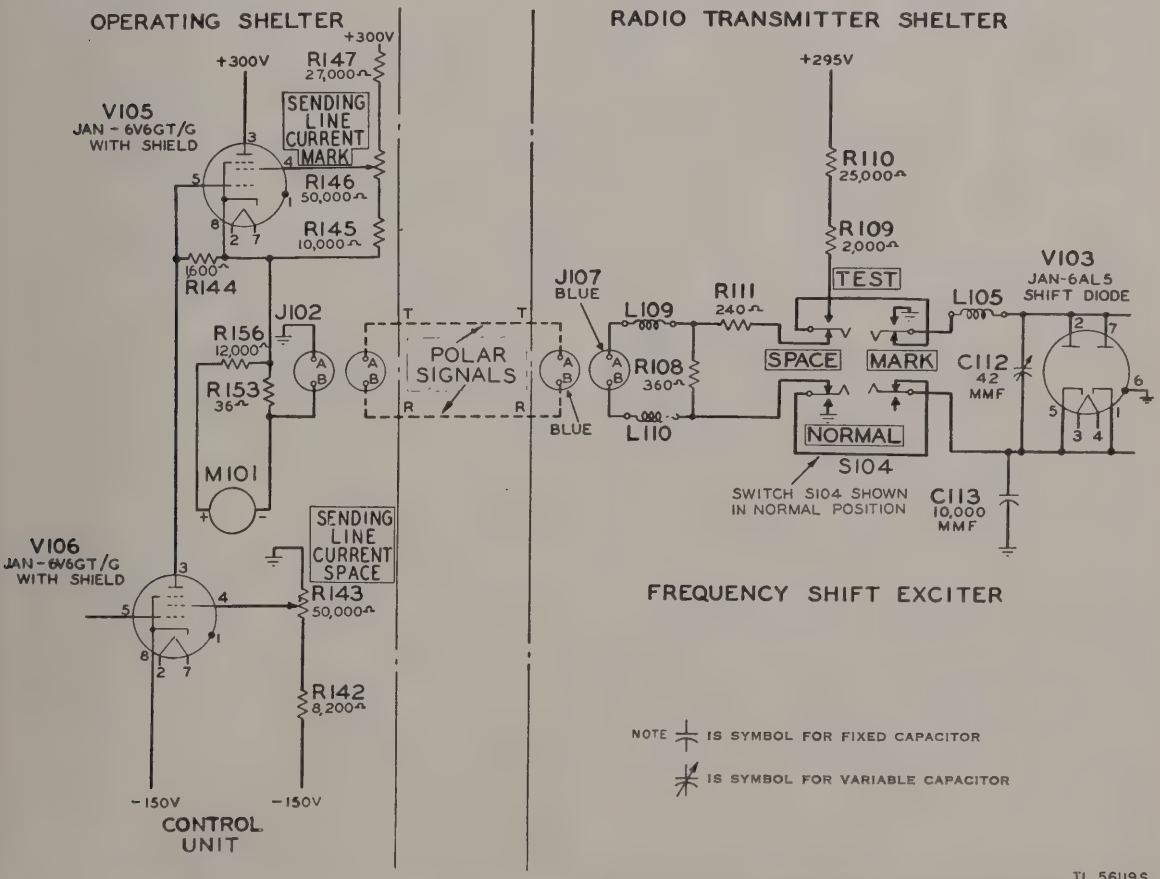

Figure 19. Connection of control unit to frequency shift exciter, simplified schematic diagram.

tain maximum output voltage. The resonance condition of this tuned circuit is indicated when the illumination of the BUFFER INDICATOR tube I101 is maximum.

74. Keying Control Circuit (fig. 19)

The keying of the frequency shift exciter for mark and space signals is determined by the conduction and nonconduction of tube V103 which is controlled by the control unit associated with the teletype equipment. A simplified schematic diagram of the keying control circuit including the control unit and TEST key circuits is shown in figure 19. The operation of tubes V105 and V106 in the control unit is controlled by the sending teletypewriter as explained in paragraph 89. Tube V105 in the control unit conducts on marking signals from the teletypewriter and provides a positive potential on the cathode of tube V103, a tube JAN–6AL5 double-diode with both sections connected in parallel. This positive potential prevents tube V103 from conducting. Tube V106 in the control unit conducts on spacing signals and provides a negative potential on the cathodes of diode tube V103, thereby causing it to conduct. When the diode conducts, variable capacitor C111, resistor R107, and capacitor C113 (fig. 18) are effectively connected across a portion of coil L101, thereby causing a shift in the oscillator frequency. During set-up operation, capacitor C111 is adjusted to provide reduction in the transmitter frequency of 212.5 to 850 cycles. A three-position TEST key is provided in the circuit for establishing test marking and spacing conditions on the diode tube. With the TEST key in the NORMAL position, the control unit circuit is connected directly through to the diode. In the SPACE position the control unit circuit is disconnected, the diode plates are connected through coil L105 and resistors R109 and R110 to the B+ supply, thereby causing the diode to conduct and shift the oscillator frequency. In the MARK position, the control unit circuit is also disconnected from the diode and the diode plates are grounded, thereby insuring transmission of a mark signal.

75. Monitoring Circuit (fig. 20)

a. The monitoring circuit (fig. 20) consists of an audio-frequency oscillator, a mixer circuit, and an amplifier circuit. The output of the mixer tube is connected to a phone jack and an electric eye indicator tube to detect audibly and visually any difference in frequency between an audio beat signal from Frequency Meter BC–221, which is connected to jack J105, and the 850-cycle signal produced by the audio-frequency oscillator in the monitoring circuit. The input from Frequency Meter BC–221 consists of the audio difference frequency between the transmitter output space signal and the mark signal frequency as set on the frequency meter. This difference frequency is amplified by tube V109 whose output is connected to one of the control grids of mixer tube V108 through capacitor C124. The other control grid of mixer tube V108 is connected across a part of output coil T102 of the 850-cycle oscillator. With TEST OCS switch S106 in the 850 ∽ position, +295 volts is connected through 15,000 ohms (R119 and R120) directly to the screen grid and through coil L107 to the plate of oscillator tube V107.

b. Oscillator tube V107, a JAN–6SJ7 high gain pentode, is connected as a feed-back oscillator. The plate circuit of tube V107 is connected through capacitor C117 to the resonant circuit consisting of the primary winding of transformer T102 tuned to 850 cycles by capacitors C133 and C118 to C122. The secondary winding of transformer T102 is connected back through capacitor C115 to the grid of tube V107 in the proper phase to sustain oscillations. The control grid of tube V107 is biased by the voltage drop across resistor R118 between the control grid and the grounded cathode. Capacitors C119 to C122 are connected at the factory to obtain an audio frequency of 850 cycles.

c. When an 850-cycle signal is connected to one control grid of mixer tube V108 from the local test oscillator circuit and an 850-cycle signal is connected to the other control grid of tube V108 from Frequency Meter BC–221 through jack J105 and amplifier tube V109, a zero beat is obtained in the headphones connected to the PHONES 850 ∽ TEST jack. This jack is connected to plate circuit of the mixer tube through capacitor C128 and potentiometer R132. A second jack J102 and switch S103 (fig. 65), are not normally used but are provided as a variable output source from the frequency shift exciter

for operation of a transmitter which might require an abnormal r-f voltage.

76. Power Supply (fig. 21)

a. The d-c power supply arrangement (fig. 21) consists essentially of a full-wave rectifier with a nonregulated +295-volt output and a regulated +210-volt output. The a-c supply voltage is passed through filter Z101 to remove any r-f current picked up by the input leads. When the AC SUPPLY toggle switch is operated, 115-volt, a-c power is connected to the primary winding of transformer T101. When power is applied, the panel Lamp I102 marked AC SUPPLY will light. The secondary winding 7–9 of transformer T101 is connected to the full-wave rectifier tube V104 and provides rectifier d-c current through choke coil L106. Coil L106 and capacitor C114 form a choke-input filter to filter the rectified current. Resistors R112 and R113 in series with regulator tubes V105 and V106 are bridged across the +295-volt output of the rectifier to provide a regulated +210-volt output-voltage. Each of the tubes (V105 and V106) has a 105-volt drop developed across it resulting in a regulated +210 volts. Resistors R112 and A113 are current limiting resistors. Resistors R114, R115, R116, and R117 are also bridged across the +295-volt unregulated output circuit and form a potential divider from which a low voltage is obtained for the operation of relay K101.

b. Resistors R136 to R143 constitute a heater for the oven which contains certain critical oscillator components which are affected by temperature changes. This heater is provided to minimize frequency changes in the oscillator

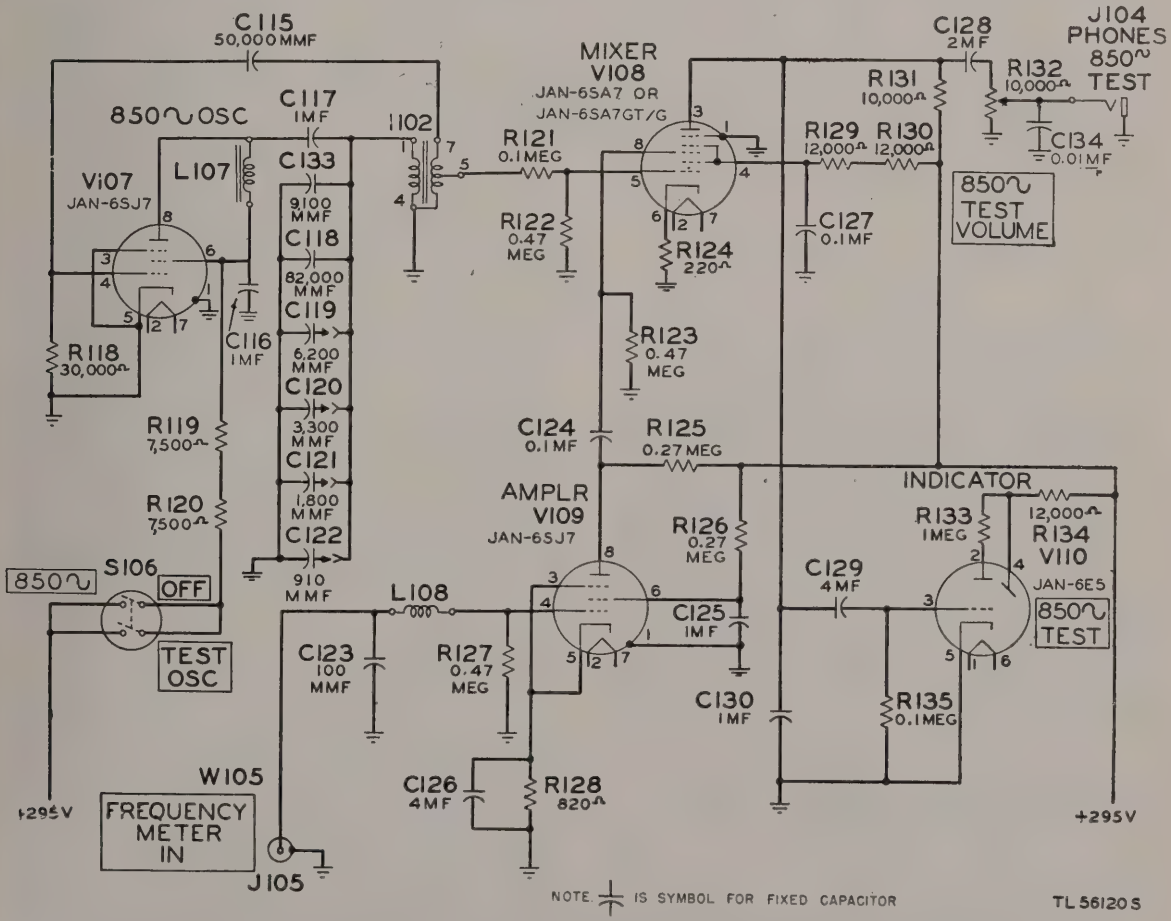

Figure 20. Frequency shift exciter monitoring circuit, simplified schematic diagram.

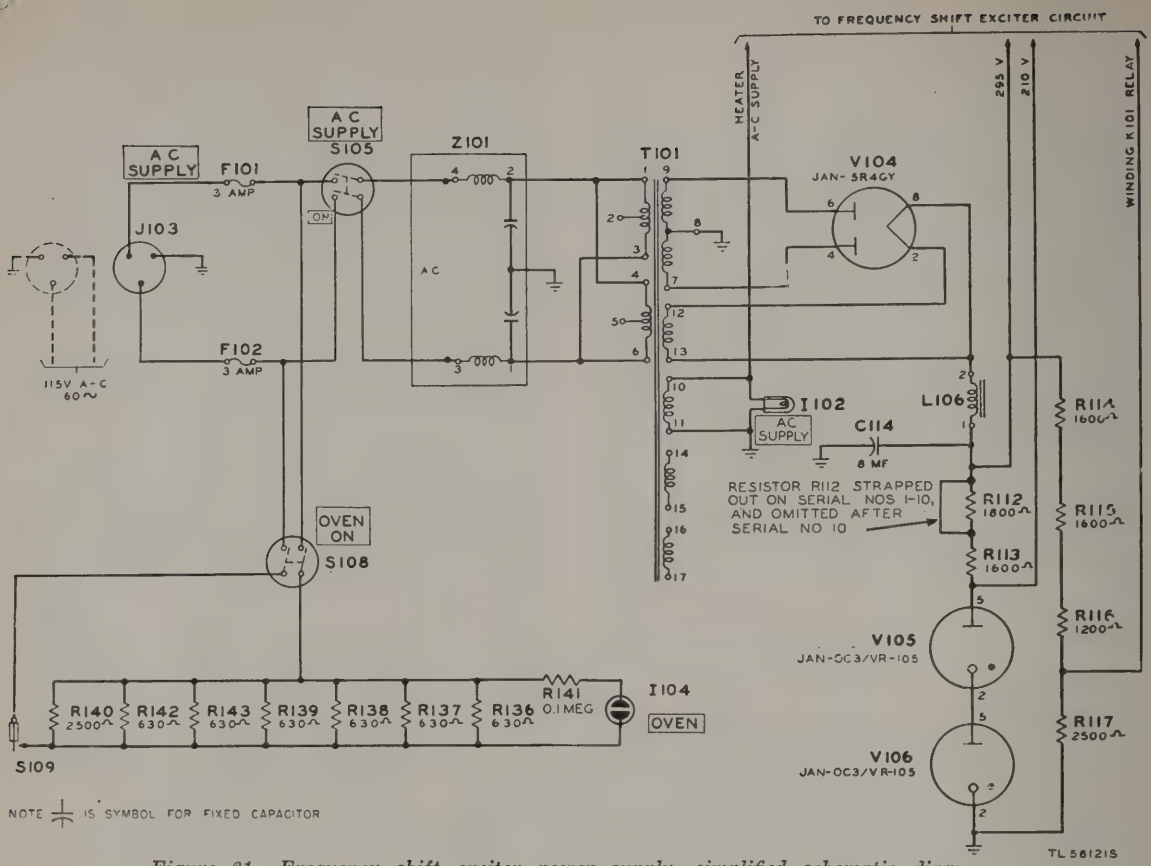

Figure 21. Frequency shift exciter power supply, simplified schematic diagram.

which would otherwise be caused by changes in the ambient room temperature. Thermostat S109 is connected in series with the heater to regulate the oven temperature to approximately 60° C. A low current neon pilot lamp, I104, lights when switch S108 is thrown to ON and the thermostat contacts are closed. This lamp is connected across the a-c supply in series with a current limiting resistor R141 and switches S108 and S109. On the front of the exciter unit this lamp is covered by an amber lamp cap and is designated as OVEN. Switch S108 is also designated as OVEN on the front of the excitor unit.

Section XIII. THEORY OF DUAL DIVERSITY CONVERTER

77. General

In the description of the functioning of the dual diversity converter, the over-all circuit is broken up into its main circuit elements which are represented by blocks in the block diagram. (See fig. 22.) The circuit of each portion of the converter represented in figure 22 is shown in simplified schematic form in a separate figure. The simplied diagrams show all of the parts and wiring but minor liberties have been taken to simplify the current arrangement, as for example, the separation of portions of a wafer switch section.

78. Input Circuit

a. The input circuit of the converter (fig. 23) is arranged for dual space diversity reception. With this method of reception, duplicate incoming telegraph signals are received by two radio receivers connected to separate antennas spaced from each other at a distance usually at least 3 wavelengths. This spacing minimizes the effects of selective fading. The converter is arranged to demodulate and combine the sig-

nals from the two receivers. The combined signals control the d-c telegraph loop circuits and a tone modulator which produces tone-on and tone-off keying signals.

b. The i-f voltage inputs connected to both the channel-A and channel-B receptacles (J101 and J102) are of the same nominal frequency within a band of 400 to 470 kilocycles, and are frequency-modulated telegraph marking and spacing signals. The frequency-modulated signals are obtained from the final i-f amplifier stages of the two radio receivers.

c. In Radio Teletype Equipment AN/TRA–7 a separation of 850 cycles is used between marking and spacing signals. The voltages of the incoming signals are stepped up by the input networks Z103 and Z101. Each network may be adjusted to any frequency within the range of 400 to 470 kilocycles. Channels A and B are separately tuned to the incoming i-f frequencies by means of capacitors C101 and C103, respectively. These capacitors are of the screw driver adjusting type and are mounted within the converter. When once adjusted to the receiver i-f frequency they should not need further readjustment.

d. The i-f signals from the radio receiver of each channel are heterodyned to a lower frequency, and amplified by means of the pentagrid converter tubes V101 and V102. This frequency conversion provides additional gain and improved selectivity. The incoming i-f signals on channel A are converted by tube V101 to a 50-kc signal, and the incoming i-f signals on channel B are converted by tube V102 to 29.3 kilocycles.

e. With reference to channel A this conversion of frequency is effected as follows: The screen grid, control grid, and cathode (pins 4, 5, and 6) of tube V101, together with tuned circuit Z104 and capacitors C105 and C102, comprise a Hartley oscillator having a frequency range of 425 to 525 kc. The screen grid acts as the plate of the oscillator and is held at r-f ground potential by capacitor C109. When used with Radio Set AN/MRC–2 this oscillator is tuned to 520 kc which, when mixed with the 470-kc incoming intermediate frequency connected to the injector grid (pin 8), produces a 50-kc output signal. Similarly, for channel B, the screen grid, control grid, and cathode of tube V102, together with tuned circuit Z102 and capacitors C106 and C104, form similar oscillator having a frequency range of 425 to 525 kc. For channel B in Radio Set AN/MRC–2 this oscillator is tuned to 499.3 kc which, when mixed with the incoming intermediate frequency connected to the injector grid (pin 8), produces a 29.3-kc output signal. These oscillators are always tuned to a frequency higher than the incoming intermediate frequency to prevent any conversion of the mark and space signals.

f. Capacitors C105 and C106 are the coarse adjustments for their respective oscillators. Capacitor C105 associated with the oscillator of channel A is a screw driver adjustment located within the converter, adjacent to capacitor C101. Capacitor C106 associated with the oscillator of channel B is also a screw driver adjustment and is located within the converter adjacent to capacitor C103. The FINE TUNING capacitors C102 and C104 for channels A and B, respectively, are controlled from knobs on the front panel of the converter. The range of adjustment of these controls is as follows:

Oscillator frequency	Range of adjustment in cycles	
	Channel A (C102)	Channel B (C104)
At 395 kc	1,560	920
At 470 kc	More than 2,000	1,460
At 475 kc	More than 2,000	1,660

g. To reject certain noise frequencies and interference from nearby transmitting stations, it is desirable to limit the bandwidth to a value not greater than that which is adequate for the particular signals received. Accordingly, the outputs of the mixer tubes V101 and V102 are connected to either a narrow band or a wide band filter by turning the BAND WIDTH switch (S101) to NARROW or WIDE. The association of the switch positions, the channels, the filters, and the frequency bandwidths is as follows:

Channel	S101 switch position	Filter	Frequency range (cycles)
A	NARROW	Z107	50 kc ± 750
A	WIDE	Z108	50 kc ± 1,500
B	NARROW	Z105	29.3 kc ± 750
B	WIDE	Z106	29.3 kc ± 1,500

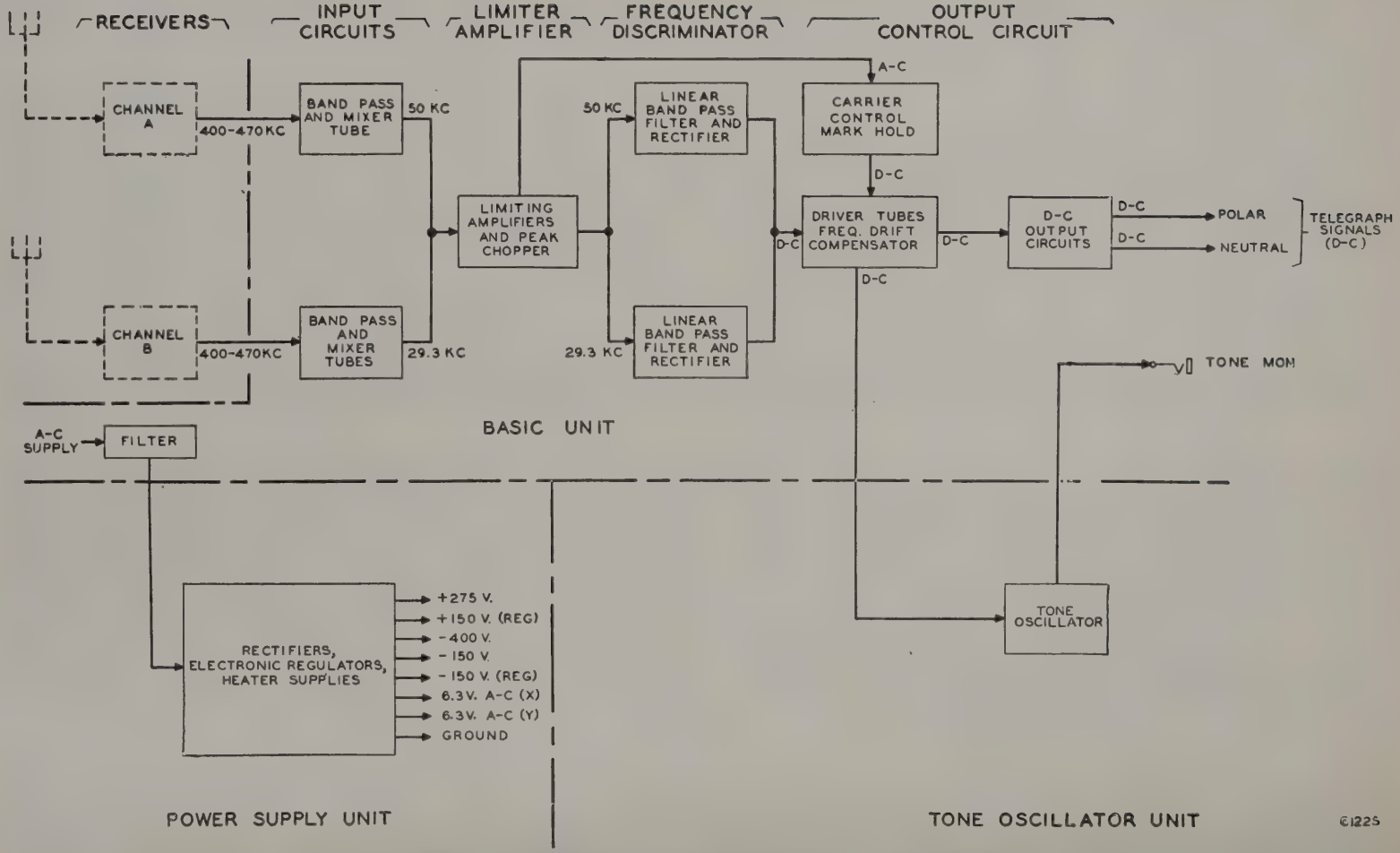

Figure 22. Dual diversity converter, functional block diagram.

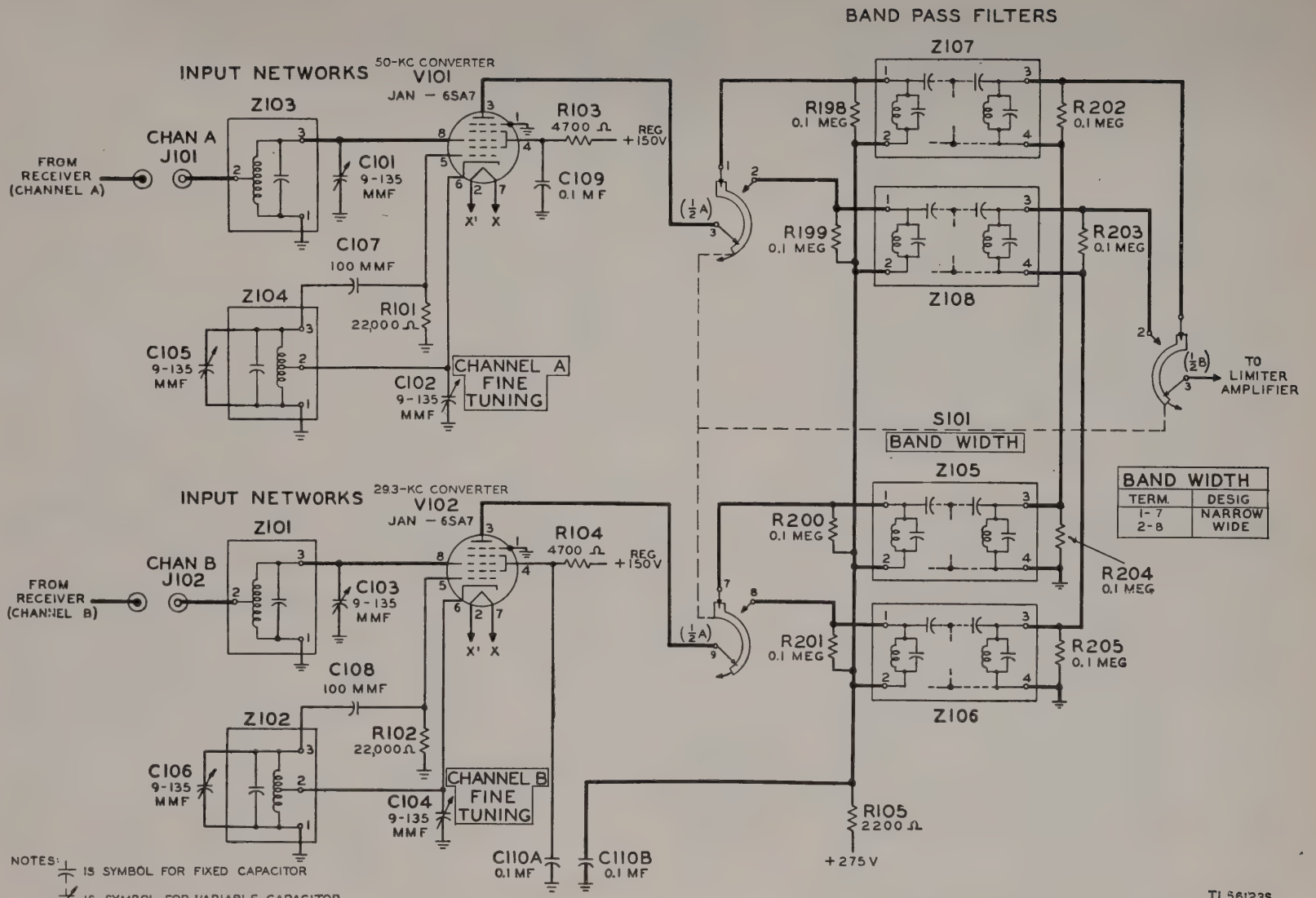

Figure 23. Dual diversity converter input circuit, simplified schematic diagram.

h. Channel A and channel B are separate and distinct up to and through the band-pass filters, at which point the two converted frequencies are combined.

79. Limiter Amplifier

a. Frequency-shift telegraph signals radiated from the transmitting antennas vary in frequency in accordance with the original d-c marking and spacing telegraph signals, but are practically constant in amplitude. In the radio link between the transmitter and the receiver these signals may encounter static disturbances, noise, and fading effects which, in occuring, produce variations in signal amplitudes. A limiter amplifier is provided in the dual diversity converter circuit to eliminate undesirable amplitude variations in the incoming signals before they are connected to the discriminator for detection. The limiter amplifier circuit (fig. 24), produces relatively square waves of a constant magnitude by tube limiting actions and by cutting off the peaks of any signals which are amplified beyond an established limit.

b. The combined signals of channels A and B, received from the input circuit and consisting of 50-kc and 29.3-kc carrier currents each frequency-modulated by the same original telegraph signals, are connected through 470,000-ohm limiting resistor R106 to the control grid of tube V103. For positive alternations of low-level signals, tube V103 acts solely as an amplifier. For positive alternations of high-level signals, the control grid will be driven excessively positive, thereby causing grid current to flow. Grid current flowing through

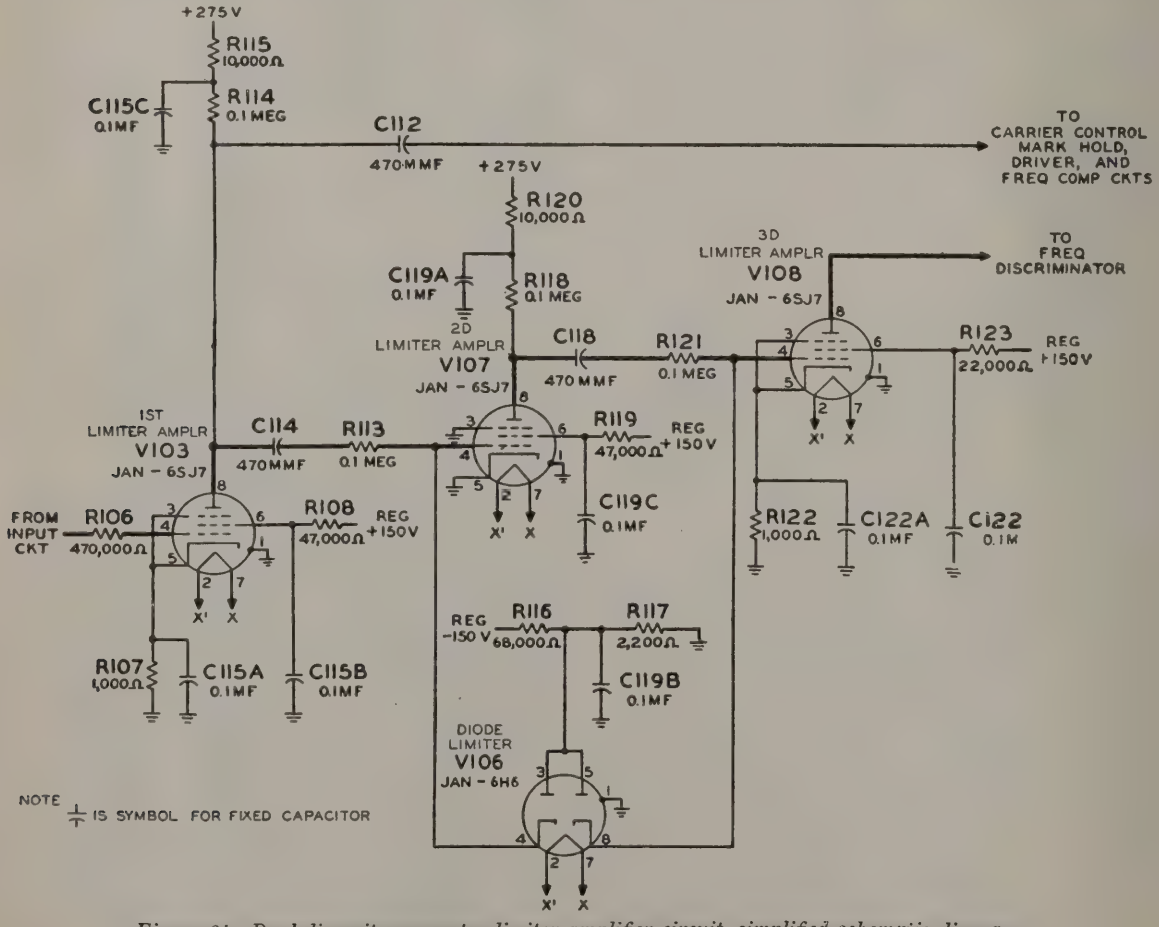

Figure 24. Dual diversity converter limiter amplifier circuit, simplified schematic diagram

resistor R106 will limit the potential at the grid and in turn reduce the tube amplification. The amplification of strong negative alternations of incoming signals are also limited since the tube will be driven beyond cut-off.

c. Part of the plate output of tube V103 is connected through capacitor C114 and limiting resistor R113 to the control grid of tube V107 and to one cathode (pin 4) of the double diode tube V106. Tube V107 again amplifies the positive or negative signals and again provides the same limiting action for positive alternations as tube V103 (*b* above) as established by plate saturation and grid current flow. Section 3–4 of the double diode clips the strong negative signal peaks since, with a strong negative signal, the cathode of tube V103 is driven more negative relative to the diode plate, thereby causing current to flow through the 3–4 section of tube V106. This current is shunted away from the control grid of tube V107 thereby reducing the signal amplification.

d. The plate output voltage of tube V107 is coupled to the grid of V108 through capacitor C118 and limiting resistor R121. Tube V108, together with section 5–8 of tube V106, operates in a manner similar to that of tube V107 and section 3–4 of tube V106 just described. This insures a constant amplitude signal at the input of tube V108 even with signal levels which produce little or no limiting action at the input of tube V107.

e. The output of limiter-amplifier tube V108 is therefore comparatively uniform in amplitude consisting of either or both channel frequencies (50-kc and 29.3-kc) each of which, for the purpose of this description, is frequency-modulated in the order of +425 cycles by telegraph mark signals and —425 cycles by space signals. This limited output is applied to the discriminator circuit for demodulation.

f. A portion of the output of the first limiter amplifier (pin 8 of V103) is coupled to the output control circuit through capacitor C112. If the carrier is shut off, the output of V103 reduces to zero and the output control circuit automatically establishes a steady marking condition on the d-c telegraph loops and tone telegraph channel. When a carrier signal is being received, the output of tube V103 acts on the output control circuit to permit normal mark and space signals to be produced. This circuit action is described in paragraph 81*c*.

80. Linear Discriminator

a. The discriminator circuit (fig. 25) interprets the frequency variations of the frequency-modulated signal in terms of d-c telegraph marking and spacing signals. One of the two discriminators interprets the frequency-modulated signals received over channel A, and the other interprets the frequency-modulated signals received over channel B. The theory of operation of the discriminator circuit is illustrated in figures 26 and 27.

b. Referring to the 50-kc discriminator used for channel A (fig. 25), the upper and lower secondary windings of the input transformer of Z109 are tuned to resonate at a few kilocycles above and below 50 kc, respectively. The upper winding L1 ((A), fig. 26) is connected in series with resistor AB and one section of double-diode tube V109, and the lower winding L2 is connected in series with resistor BC and the other section of double-diode tube V109. With the two diode sections connected as illustrated ((A) fig. 26), the currents in the two circuits are in the direction indicated by the arrows. The polarities of the voltage drops across resistors AB and BC are positive at the ends toward the cathode of V109 and negative at the ends towards the plates of V109. Both resistors are joined at point *B* which is the negative side of each resistor. The two voltage drops, therefore, oppose each other and the resultant voltage between points *A* and *C* is the difference between these two voltages. Also, the resultant polarity depends on which of these two voltages is greater.

c. A typical frequency response characteristic curve ((B), fig. 26) under Z109 indicates general voltage levels for each tuned winding L1 and L2 for frequencies centering around 50 kc. The curves designated as MARK and SPACE under Z109 ((B), fig. 26) represent the voltages across resistors AB and BC respectively. Since the voltage drops across these resistors are connected series opposing, the resultant voltage across the two resistors A to C may be illustrated as shown under Z109 ((A), fig. 27) when ground is connected to point *A* and the output is taken from point *C*. From this curve it will be noted that the resultant

voltage increases gradually in a positive direction as the frequency changes from 50 kc to lower frequencies and becomes gradually more negative as the frequency changes from 50 kc to higher frequencies. Throughout the greater part of the frequency range involved in signally there is practically a linear relation between the magnitude of the resultant voltage and the frequency change.

d. A similar demodulation takes place in network Z110 of the other discriminator, but this discriminator responds to frequencies which center around 29.3 kc. The theory of operation is similar and is also covered by figures 26 and 27. It is noted from figures 26 and 27 that the outputs of both discriminators are connected in series so that the d-c output signal from both discriminators add algebraically. Switch S102 in the output of the two discriminators allows reversing the polarity of the output signals.

e. For the purpose of illustration, it is assumed in (A), figure 27 that a positive mark signal results from the lower frequencies centering around 29.3 kc and 50 kc. Depending upon the relative locations of the frequencies, a larger voltage, E, is produced in the lower part of each discriminator, and a smaller voltage, e, is produced in the upper part. The voltages add to produce a net positive voltage (+2E − 2e) or a net negative voltage (−2E + 2e). Under the conditions assumed for this illustration, the positive voltage represents a mark, and the negative voltage a space.

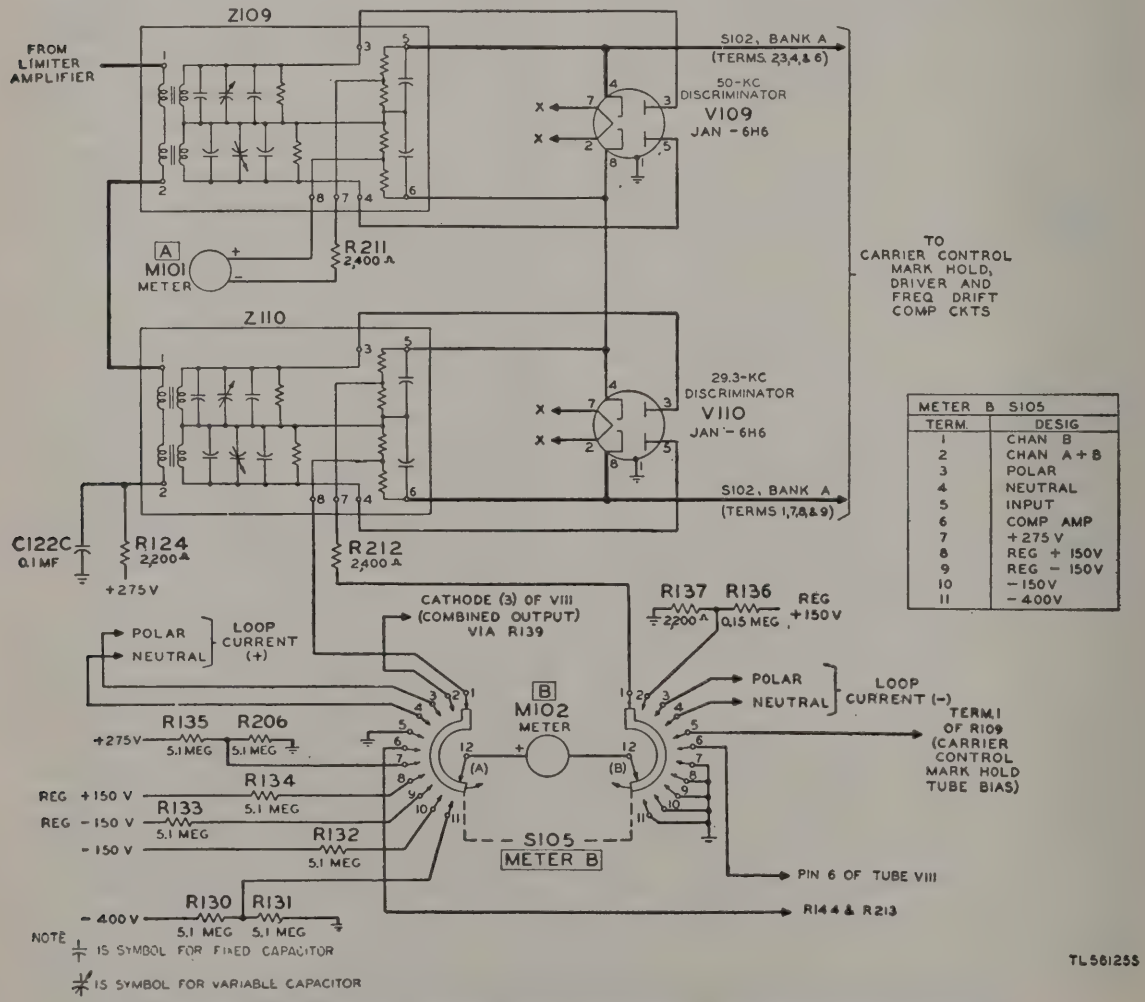

METER B S105	
TERM.	DESIG
1	CHAN B
2	CHAN A + B
3	POLAR
4	NEUTRAL
5	INPUT
6	COMP AMP
7	+275 V
8	REG +150V
9	REG −150V
10	−150V
11	−400V

Figure 25. Dual diversity converter linear discriminator, simplified schematic diagram.

f. (B), figure 27 illustrates the effect of reversing the connections of the discriminators to provide a net negative voltage for a mark and a net positive voltage for a space.

g. The NORMAL and REVERSE positions of the OUTPUT switch thus provide for d-c mark and space output signals of the proper polarities if the higher frequency components of the i-f carrier represents a mark with some receivers, or a space with other receivers. It is also necessary to reverse the output of the discriminators, depending upon whether or not the drift compensator feature is used as described in paragraph 81.

h. Meter M101 is connected across the output of discriminator Z109, and an identical meter M102 is connected across the output of discriminator Z110 through contacts of METER B switch S105 (in CHAN B position) to allow observing the operation of the discriminators. Meter M102 is also used for other electrical measurements in the converter circuit, and is connected to the various circuits by means of switch S105. The type of measurements made with M102 are indicated in the table in figure 25 which lists the designations of the 11 positions.

81. Driver Circuit

a. The d-c mark and space signals from the linear discriminator are connected through OUTPUT switch S102 to the output control circuit (fig. 28) where they produce signals for transmission over a d-c polar or neutral telegraph loop, or over a voice-frequency carrier telegraph channel. The output control circuit consists of a driver circuit, a frequency drift compensator circuit, and a carrier control mark hold circuit. A filter is connected in the input to the driver circuit to minimize the effect of noise on the mark and space signals. Two capacitors, C125 and C126, provide for conditions of low and high signaling speed, and are added or removed from the filter by means of

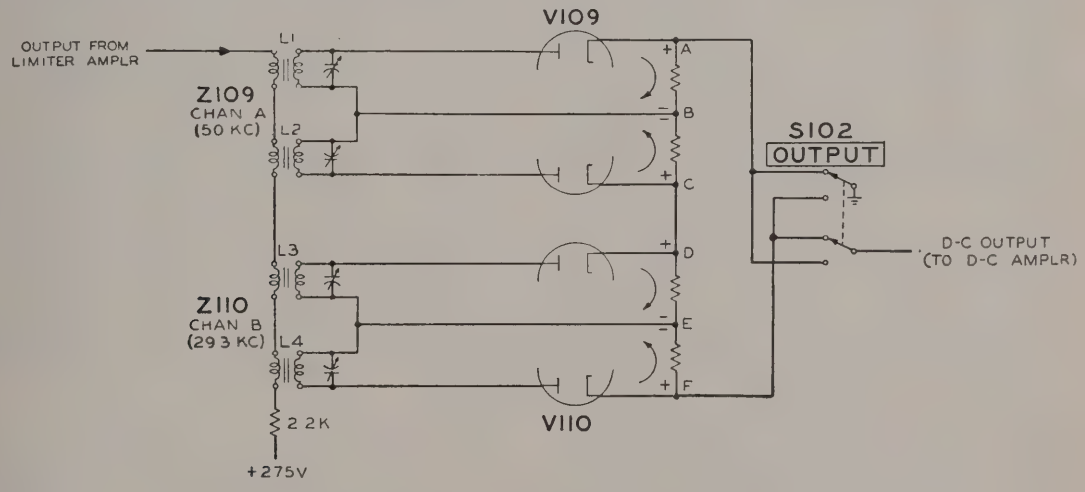

(A) SIMPLIFIED DISCRIMINATOR SCHEMATIC

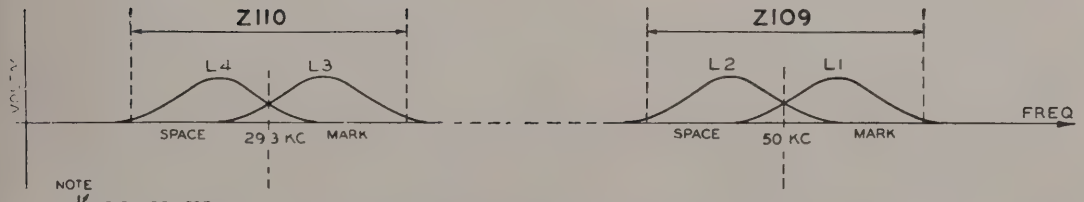

NOTE
✱ IS SYMBOL FOR VARIABLE CAPACITOR

(B) FREQUENCY RESPONSE CHARACTERISTICS

TL56126S

Figure 26. Dual diversity converter linear discriminator operation.

the L P FILT switch S103. These capacitors are connected in the circuit for low signaling speeds by operating switch S103 to the IN position. For high signaling speeds, these capacitors are removed by operating switch S103 to its off position. The frequency drift compensator circuit is connected by operating the DRIFT COMPENSATOR switch S104 to position IN. The drift compensator circuit eliminates bias effects due to frequency drifts if the drifts in both channels are in the same direction.

b. If the drift compensator circuit is not used, the mark and space signals from the discriminator are connected through contacts of the OUTPUT switch S102 to grid 1 of double-triode tube VIII. Assuming the OUTPUT switch S102 is on step 1 (REVERSE) (figs. 28 and (B) 29), a positive signal from the discriminator produces a positive potential on grid 1 of tube VIII. Section 1–2–3 of tube VIII is connected as a cathode follower. Hence, when the grid is driven positive, the cathode voltage changes in a positive direction to produce a positive potential on grid 4 of tube V113. This tube in turn conducts to produce a negative swing of the voltage on its plate terminal 8. The negative swing of the polarity on terminal 8 of V113 is developed across two parallel voltage dividers in the plate circuit, a point on the upper being connected to grids 1 and 4 of tube V114, and a point on the lower voltage divider being connected to the d-c output circuit for producing polar and neutral signals. The contact arm of potentiometer R160 (BIAS B) is set at a point on the upper voltage divider (R159, R160, and R161) to produce approximately equal negative (mark) and positive (space) voltage alternations with respect to a cathode potential of —150 volts. The voltage changes are, of course, produced by the changes in voltage at plate 8 of tube V113 which is connected to one end of the voltage divider.

c. Plate terminal 5 of tube V114 is normally at a 0-volt potential via resistor R197 to ground. A voltage on grid 4 from contact arm 2 of the BIAS B potentiometer is negative with respect to cathode 6 when a mark signal is transmitted which causes V114 to remain cut off. When the grid voltage is positive with respect to the cathode (space signal), tube V114 conducts. Plate-cathode current from ground through resistors R197 and R196 produces a voltage drop across R197. This causes the voltage at K of receptacle J106 to increase in a negative direction. The voltage alternations at pin K, arising from mark and space signals, cause the modulator of the tone oscillator circuit (par. 85) to conduct and transmit tone for a mark signal, and to cut off tone for a space signal. Similar voltage variations are impressed on the lead from the lower voltage divider which includes resistors R162 to R167 inclusive. (See fig. 28.) In this case a potentiometer is not used to adjust the voltage swings, but the lead is soldered to a point in the voltage divider at which the alternations are plus and minus with respect to a —150-volt cathode potential. The approximately equal voltage swings on the lead connected to the lower voltage divider controls the d-c output circuit described in paragraph 84.

d. The polarity relationships at the grids, cathodes, and plates of the tubes in the driver circuit for a mark signal are illustrated in (B), figure 29. The diagram assumes that the lower portion of each discriminator produces a positive mark output. Opposite polarities are produced for a spacing signal. The OUTPUT switch S102 is turned to position 2 if the upper portion of each discriminator produces a positive mark signal. The cathode potential of the driver tube V113 (fig. 28) can be adjusted from zero to about +17 volts by potentiometer R155 (BIAS A). The adjustment is made to produce the 0-volt transition between output mark and space signals when the input to V113 is zero.

82. Frequency Drift Compensator Circuit

a. Under operating conditions the 50- and 29.3-kc carrier frequencies may tend to drift from normal. If no compensator equipment were provided under such conditions, the telegraph d-c output signals would be biased. To minimize the biasing effect, the output control circuit is equipped with a frequency drift compensator circuit which may be connected to the driver circuit by operating DRIFT COMPENSATOR switch S104 to its IN position. (See fig. 28.) When the drift compensator circuit is used, OUTPUT switch S102 is turned to a position (NORMAL or REVERSE) which is opposite to that used when the feature is not

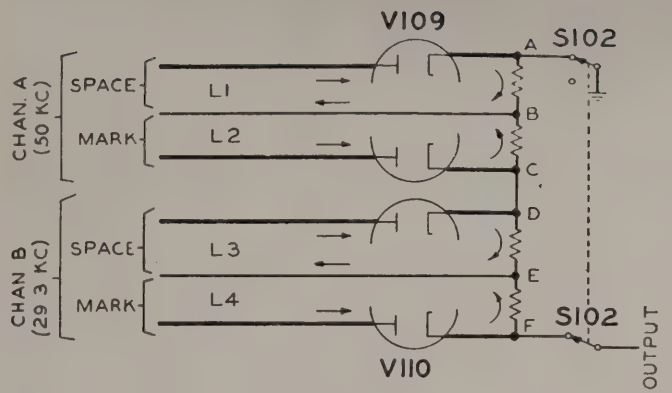

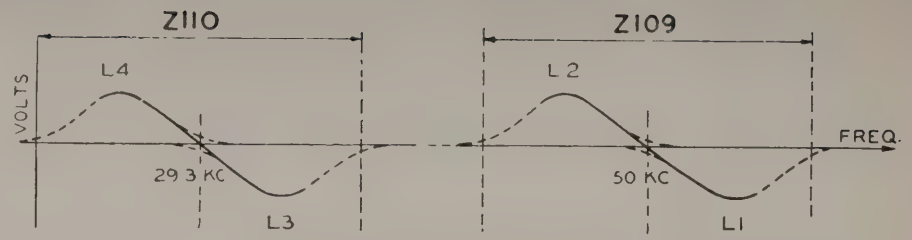

RESISTOR	MARK VOLTAGE	SPACE VOLTAGE
A - B B - C	$\begin{matrix}-e\\+E\end{matrix}\}$ +E -e	$\begin{matrix}-E\\+e\end{matrix}\}$ -E+e
D - E E - F	$\begin{matrix}-e\\+E\end{matrix}\}$ +E -e	$\begin{matrix}-E\\e\end{matrix}\}$ -E+e
TOTAL A-F	+2E -2e VOLTS	-2E+2e VOLTS

(A) POSITIVE MARK SIGNALS (SWITCH S102 IN POSITION 1)

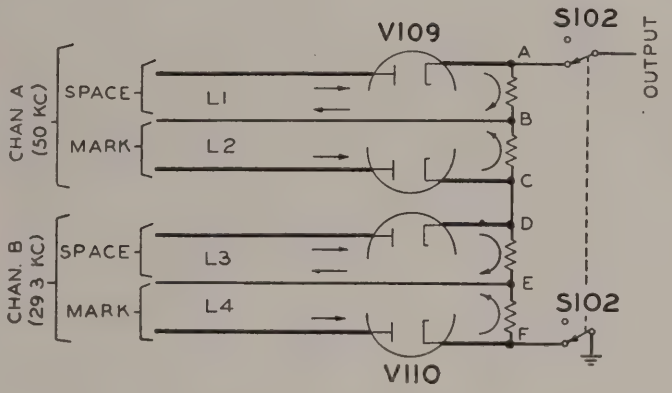

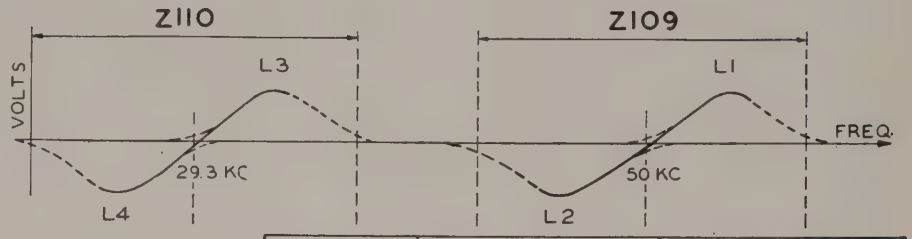

RESISTOR	MARK VOLTAGE	SPACE VOLTAGE
A - B B - C	$\begin{matrix}+e\\-E\end{matrix}\}$ -E+e	$\begin{matrix}+E\\-e\end{matrix}\}$ +E -e
D - E E - F	$\begin{matrix}+e\\-E\end{matrix}\}$ -E+e	$\begin{matrix}+E\\-e\end{matrix}\}$ +E -e
TOTAL A-F	-2E+2e VOLTS	+2E-2e VOLTS

(B) NEGATIVE MARK SIGNALS (SWITCH S102 IN POSITION 2)

TL 56127S

Figure 27. Dual diversity converter linear discriminator, theory diagrams.

used. This is due to the voltage reversal introduced by the a-c amplifier (section 2–3–6 of tube V104) which is a part of the drift compensator circuit.

b. When switch S104 is turned to the IN position, section 2–3–6 of tube V104 is connected to the output of the discriminator ahead of the driver circuit to amplify the mark and space signals. It should be noted that the input to the grid (pin 2) of tube V104 is through coupling capacitor C129, and that the plate output of this tube to grid 1 of tube V111 is through capacitor C128. With this circuit arrangement, the d-c component of the discriminator output is removed in order that the voltage differences corresponding to mark and space signals can be made symmetrical by establishing a zero-volt level approximately midway between the upper and lower voltage limits.

c. A voltage pulse corresponding to a mark or space signal is connected to the driver tubes, and is fed back to the input of the driver tubes to maintain the voltage conditions until a pulse of the opposite polarity (a space or mark signal) is delivered from the discriminator. The feedback circuit for locking in a signal condition includes section 1–2–3 of tube V114 and section 4–5–6 of tube V111. The voltage pulses produced by the discriminator are connected through the AMP GAIN potentiometer R207 to the grid of tube V104. The grid is biased a few volts negative by the voltage divider consisting of resistors R208 and R210. The AMP GAIN potentiometer is set at a point which provides proper voltage changes at grid 2 of V104; for example, +0.25 volt for a mark, and −0.25 volt for a space. The amplified plate voltage variations might be, for example, ±15 volts (centered on a potential of +80 volts).

d. Capacitor C128 eliminates the d-c component of the voltage changes at the plate of V104, thus impressing pulses in the order of ±15 volts on grid 1 of tube V111. The pulses at the cathode of tube V111 are coupled to the grid of V113 through resistor R148, thereby driving the grid of tube V113 momentarily positive. When the grid of tube V113 is driven more positive, the tube will conduct heavier, thereby lowering the voltage at its plate and in turn causing the potential at the slider arm of potentiometer R160 (BIAS B) to become more negative. Since the slider arm of potentiometer R160 is directly connected to grid 1 of tube V114, this tube will conduct less, thereby raising the voltage at its plate and in turn the voltage at the slider arm of potentiometer R145 (COMP AMP). The slider arm of potentiometer R145 is connected to grid 4 of tube V111 which is a cathode follower. When the grid of the cathode follower is driven positive, the cathode will also be more positive, and since the cathode is connected to grid 1 of tube V111 through resistors R213 and R144 and through switches S104 and S102, the grid (pin 1) of tube V111 will be held positive even after the duration of the positive pulse from the plate of tube V104. Thus, the positive pulse corresponding to a mark signal will lock the driver circuit in the mark condition until a negative (space) signal is received. The negative pulse output from plate 6 of tube V104, corresponding to a mark signal, will drive grid 1 of tube V111 negative, thereby reversing the polarities throughout the drift compensator circuit and providing a negative voltage at cathode 6 of tube V111 to hold the driver circuit in the space condition.

e. The COMP BAL and COMP AMP potentiometers are adjusted to produce ±15-volt variations at grid 1 of tube V111, assuming that signal pulses in the order of ±15 volts are transmitted through capacitor C128. The COMP BAL potentiometer adjusts the voltage variations at plate 2 of V114 to produce equal mark and space swings, while the COMP AMP potentiometer adjusts the gain through section 4–5–6 of tube V111 to provide the proper voltage levels at cathode 6; for example, ±15 volts for mark and space signals. A meter connection across resistor R213 is provided when the METER B switch S105 (fig. 25) is turned to position COMP AMP. If the drift compensator circuit is properly adjusted, the plate swings of tube V104 and the feedback voltage at cathode 6 of V111 are equal as indicated by zero or small deflections of the meter B when miscellaneous signals are received.

f. It can be seen from the above description that in response to a momentary pulse of mark signal voltage (for example, +15 volts) the feedback path produces a steady state potential of about +15 volts which locks in until a space voltage pulse of the same magnitude but of

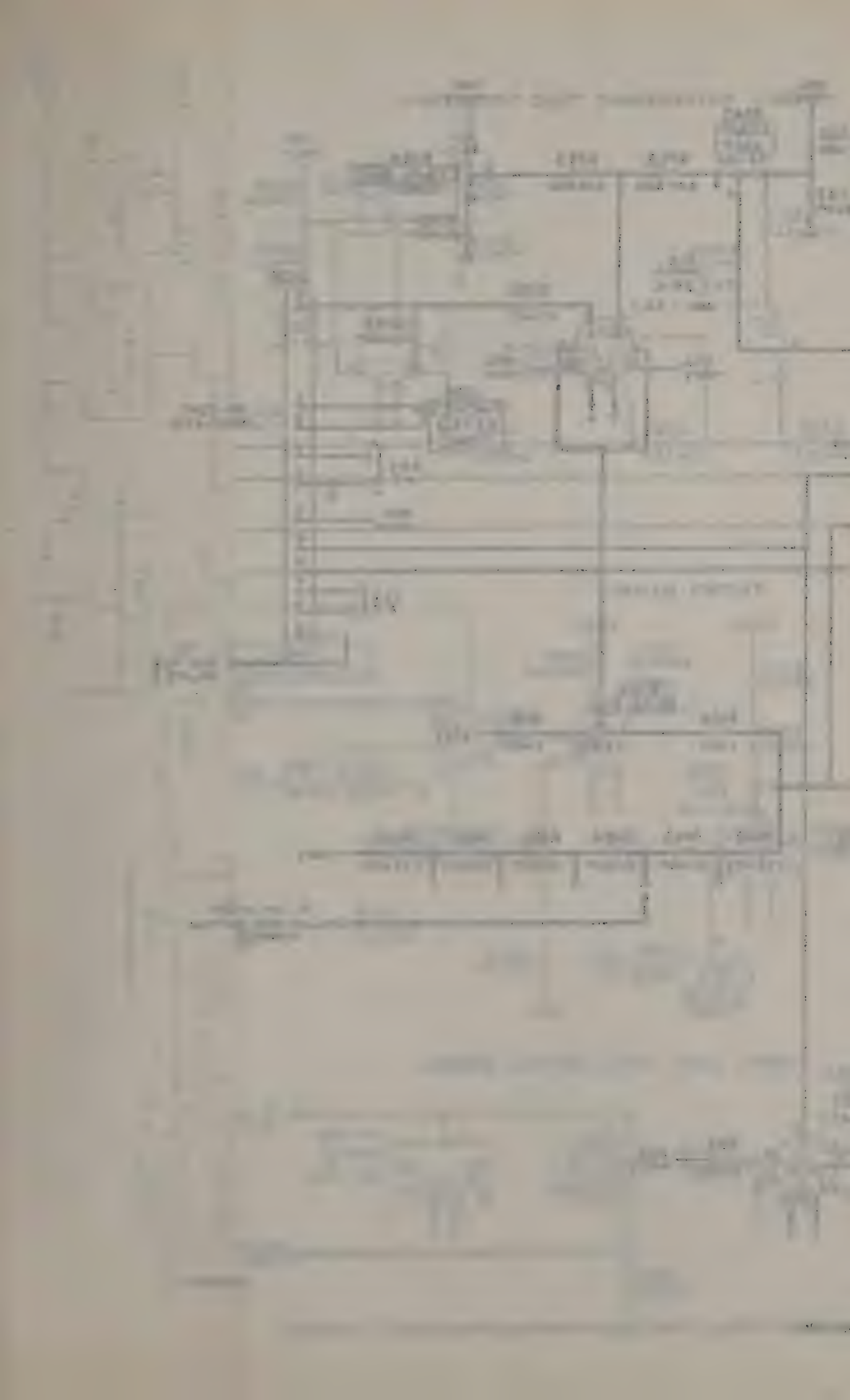

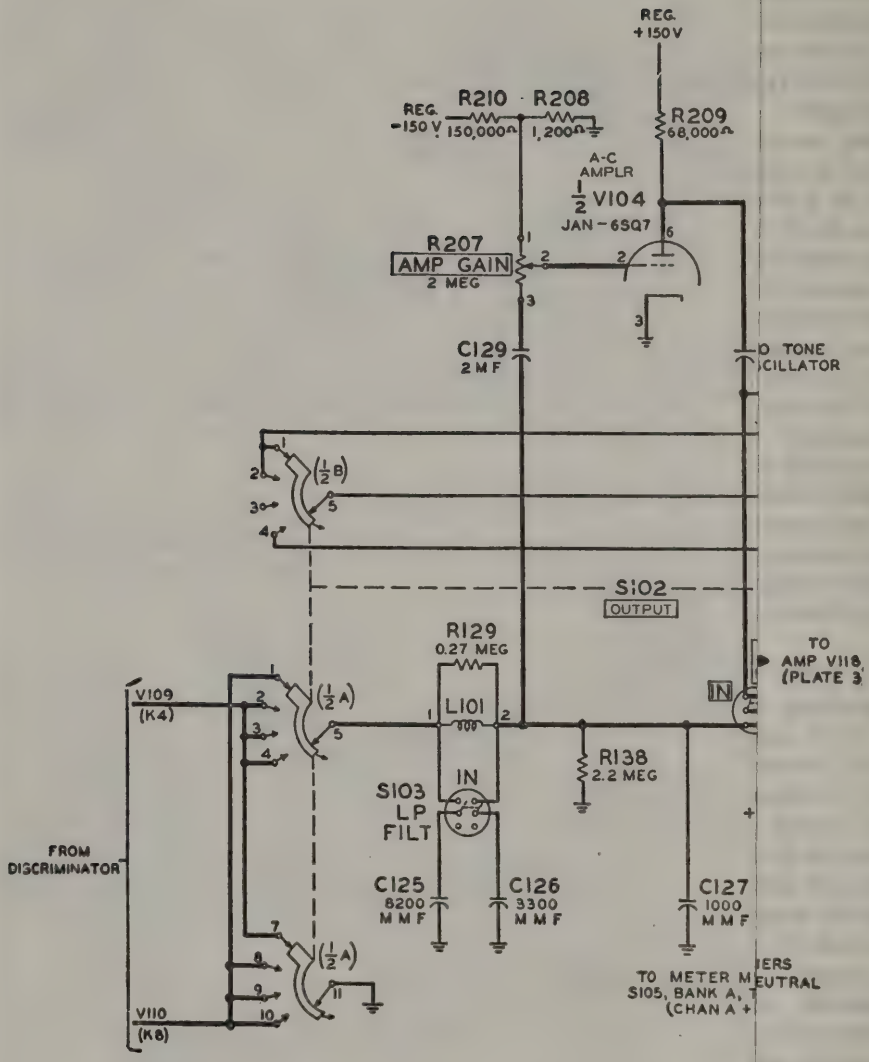

OUTPUT TERM.	S102 DESIG.
1-7	REVERSE
2-8	NORMAL
3-9	MARK
4-10	SPACE

L 561285

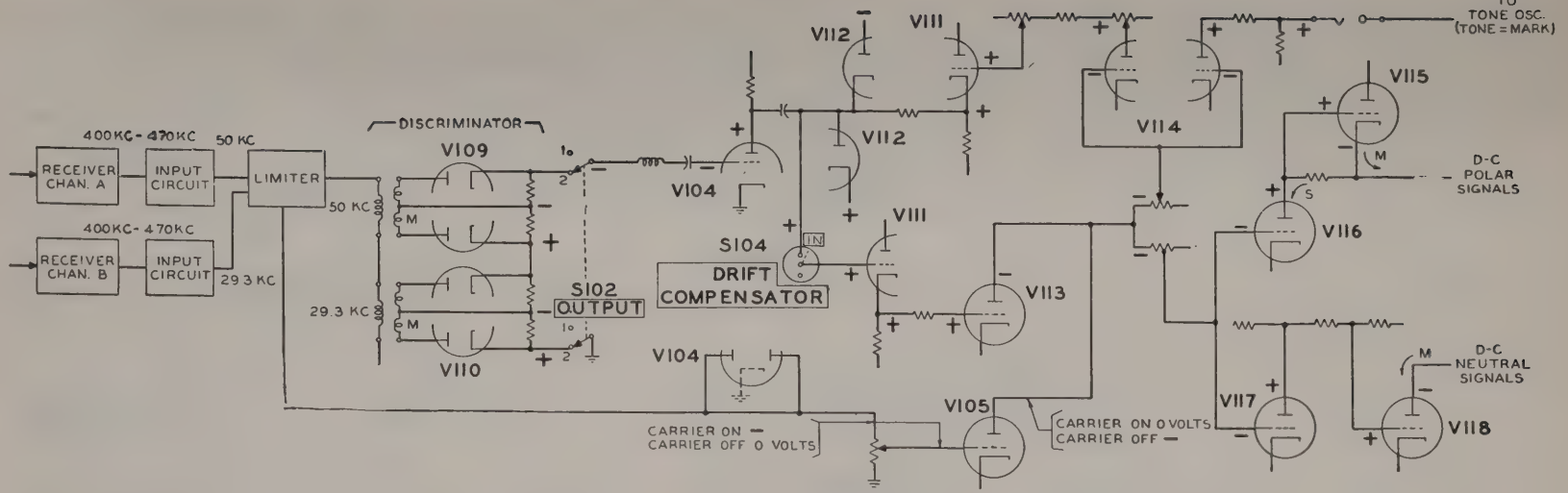

(A) DRIFT COMPENSATOR CONNECTED (MARK +)

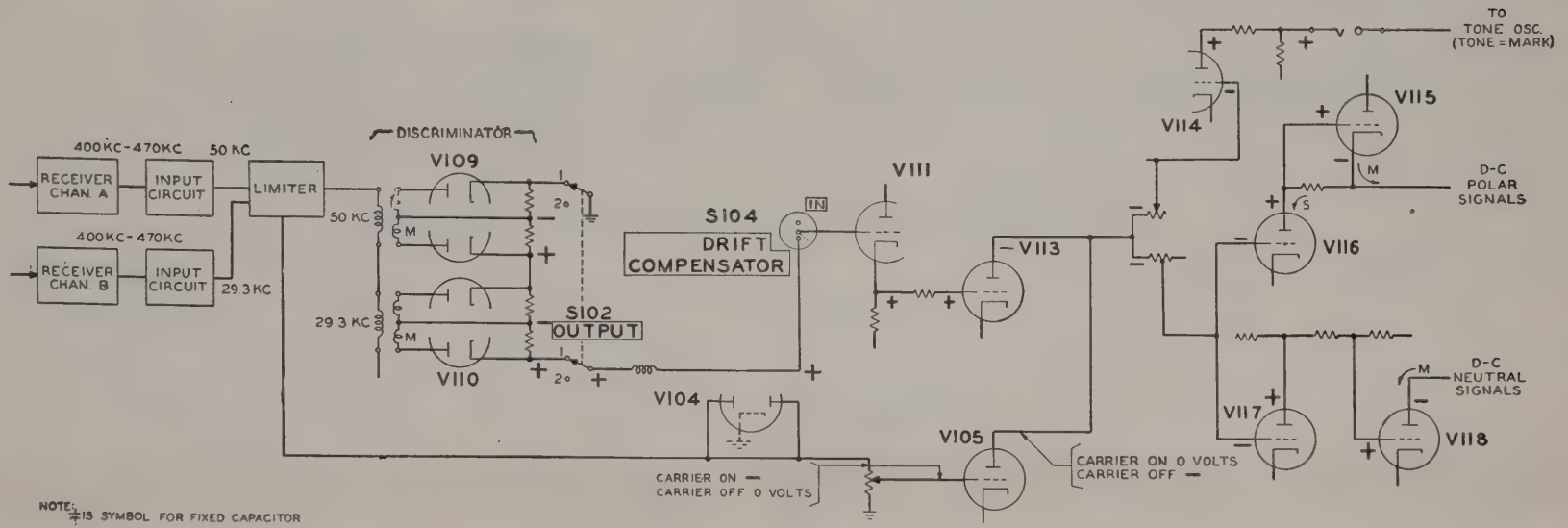

(B) DRIFT COMPENSATOR DISCONNECTED (MARK +)

TL 561293

Figure 29. Dual diversity converter polarity relations, theory diagram.

FREQUENCY DRIFT COMPENSATOR CIRCUIT

REG. +150V
REG. -150V
R146 0.15 MEG
R145 COMP AMP 0.5 MEG
R147 2,200Ω
R192 0.47 MEG
R193 0.18 MEG
R194 COMP BAL 50,000Ω
R195 39,000Ω
REG. -150 V
R210 150,000Ω
R208 1,200Ω
R209 68,000Ω
A-C AMPLR ½ V104 JAN-6SQ7
R207 AMP GAIN 2 MEG
C129 2 MF
C128 1 M F
R153 68,000Ω
R152 LIMITER 50,000Ω
R151 68,000Ω
R150 27,000Ω
R149 27,000Ω
LIMITER V112 JAN( )6H6
X' X
+275V
R141 0.22 MEG
CATHODE FOLLOWER ½ VIII JAN-6SL7
TO METER B SWITCH S105 (COMP AMP)
B(6)
A(6)
R144 0.22 MEG
R213 0.22 MEG
R143 0.33 MEG -150V
D-C AMPLR V114 JAN-6SL7
R196 0.1 MEG
R197 10,000Ω
Y' Y
J106
J105 PHONES KEYED TONE
TO TONE OSCILLATOR
6.3 V A-C
REG. +150 V
115 V A-C
TO AMP V118, (PLATE 3)

DRIVER CIRCUIT

S102 OUTPUT
S104 DRIFT COMPENSATOR
IN
R129 0.27 MEG
L101
R138 2.2 MEG
S103 LP FILT
C125 8200 M M F
C126 3300 M M F
C127 1000 M M F
FROM DISCRIMINATOR
V109 (K4)
V110 (K8)
(½ A)
(½ B)
+275V
R140 0.22 MEG
CATHODE FOLLOWER ½ VIII JAN-6SL7
R158 18,000Ω
R157 22,000Ω
DRIVER AMPLR V113 JAN-6SJ7
REG. +150 V
R127 0.47 MEG
R125 47,000Ω
REG. -150 V
R128 0.47 MEG
R126 47,000Ω
R148 0.47 MEG
R156 10,000Ω REG. +150V
R160 BIAS B
R159 1 MEG
R161 1 MEG
-400V
R162 0.36 MEG
R163 15,000Ω
R164 15,000Ω
R165 15,000Ω
R166 15,000Ω
R167 0.27 MEG
-400 V
TO AMPLIFIERS (POLAR AND NEUTRAL SIGNALS)
TO METER M102 VIA S105, BANK A, TERM. 2 (CHAN A +B)
R139 0.24 MEG
R142 0.33 MEG
-150V
REG +150 V
R154 15,000Ω
R155 BIAS A 2,000Ω

OUTPUT TERM.	S102 DESIG.
1-7	REVERSE
2-8	NORMAL
3-9	MARK
4-10	SPACE

CARRIER CONTROL MARK HOLD CIRCUIT

TO C112 AT PLATE OUTPUT OF 1ST LIMITER V103
RECTIFIER ½ V104 JAN-6SQ7
R109 MARK HOLD LEVEL 0.5 MEG
R110 1 MEG
C113 0.1M F
MARK HOLD TUBE V105 JAN-6SJ7
R111 10,000Ω REG +150V
TO METER M102 VIA S105, BANK B, TERM.5 (INPUT)
R112 22,000Ω

TL 561285

Figure 28. Dual diversity converter output circuit, simplified schematic diagram.

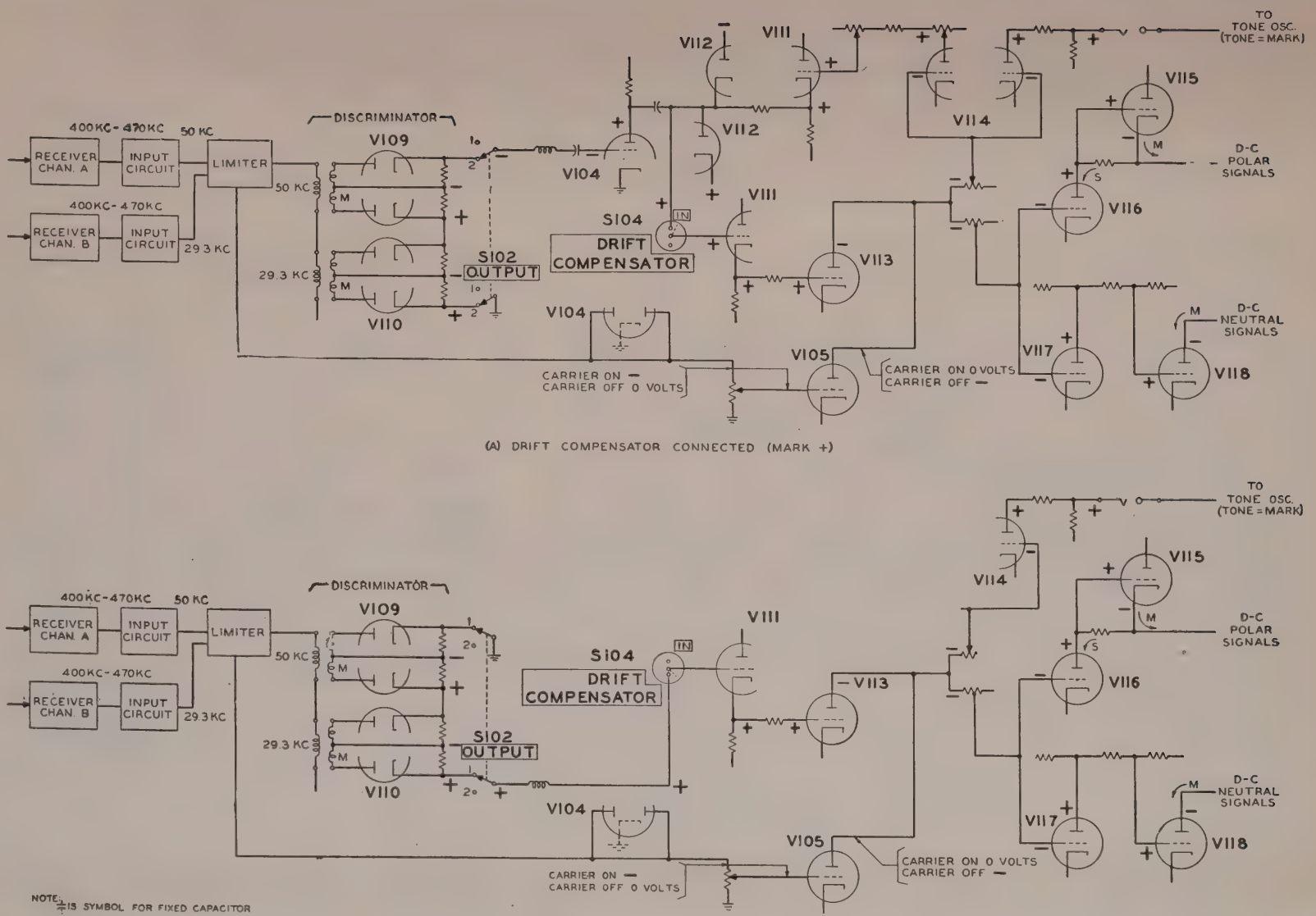

Figure 29. Dual diversity converter polarity relations, theory diagram.

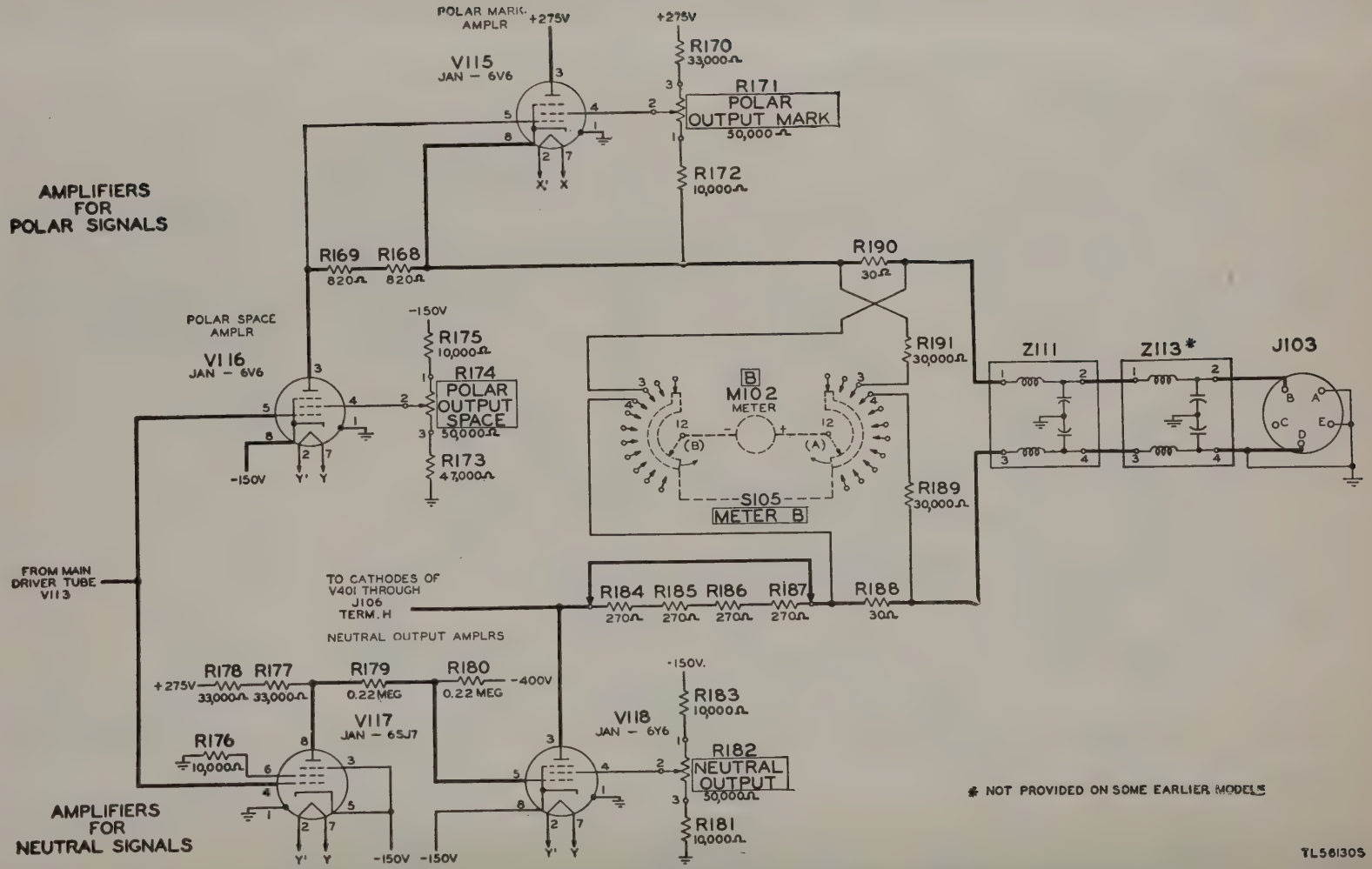

Figure 30. Dual diversity converter amplifiers for polar and neutral signals, simplified schematic diagram.

opposite polarity (—15 volts) is received. The circuit then locks in similarly for the space condition, and awaits a mark pulse to unlock it. It is occasionally possible for a transmitted steady signaling condition (mark or space) to change without unlocking the voltage established by the drift compensator circuit. This can occur during testing or adjusting procedures, and results in the first signal voltage pulse being of the same polarity as the locked-in voltage. The first signal voltage pulse is, therefore, ineffective. Due to the time constant of the circuit, a comparatively long time is required to discharge the voltage of capacitor C128 to a value low enough for a signal voltage transition to unlock the circuit. Several voltage transitions, therefore, may be lost if the signal speed is rapid. Limiter tube V112, a double diode, protects the circuit against such a condition by clipping the peaks of pulses exceeding a maximum value of about ±15 volts, as determined by the setting of the LIMITER potentiometer. This arrangement of limiting the maximum voltage of the pulse signals minimizes the length of time required to resume normal keying. The LIMITER potentiometer is connected across cathode 4 and plate 5 of tube V112, and between positive and negative voltages of two voltage dividers consisting of resistors R150 and R153. and resistors R149 and R151, respectively.

83. Carrier-Control Mark-Hold Circuit

The purpose of the carrier-control mark-hold circuit shown in the lower part of figure 28 is to hold a mark signal on the telegraph loop circuit if the incoming carrier should fail, or if it should be shut off for any reason. As long as an incoming carrier signal is received over the radio link, a 50- and 29.3-kc signal voltage will appear at the output of tube V103. (See par. 79.) The carrier voltage is applied to the double-diode portion of dual-purpose tube V104. The diode elements of V104 shunt the positive peaks of the 50- and 29.3-kc carrier to ground, and establish a negative potential on grid 4 of tube V105. Under this condition, no plate-cathode current flows in tube V105, and the tube has no effect on the mark and space signals produced by the driver tube V113. If the r-f carrier fails for any reason, the 50- and 29.3-kc carriers reduce to zero and therefore the negative voltage on grid 4 of tube V105 will be reduced to zero. Tube V105 will therefore conduct and product the same effect at terminal 8 of driver tube V113 as exists when a mark signal is transmitted through the driver circuit. The condition is maintained as long as the carrier is shut off, and is removed automatically as soon as the carrier is again received.

84. D-C Output Circuit

a. GENERAL. The d-c output circuit (fig. 30) converts the output of the driver circuit into polar and neutral telegraph signals. Two tubes, V115 and V116, are used to produce the polar signals, while two separate tubes, V117 and V118, are used to produce the neutral signals. The input circuit to the control grids of tubes V116 and V117 is from a point on the voltage divider in the plate circuit of tube V113 (fig. 28) which includes resistors R162 to R167, inclusive. The voltage on this lead is negative with respect to the —150-volt cathode potential of the two tubes when a mark signal is transmitted, and positive with respect to this potential when a space signal is transmitted. The alternation of the voltage from plus to minus is controlled by driver tube V113. (See fig. 28.) The lead to the d-c output circuit is connected to a point on the voltage divider at which nearly equal plus and minus alternations are produced, as determined by voltmeter tests.

b. POLAR TELEGRAPH SIGNALS. (1) The two polar output tubes, V116 and V115, are connected in such a manner that one tube conducts while the other tube is cut off, and vice versa. Referring to figure 29, observe that control grid 5 of tube V116 is minus for a mark signal and plus for a space signal.

(2) When a mark signal is transmitted, the minus potential on the control grid of tube V116 cuts off this tube. However, since the control grid of tube V115 is near the cathode potential, tube V115 will conduct, thereby effectively connecting a positive polarity of +275 volts at the plate of V115 to cathode pin 8, and thence over the connecting loop to the control unit and back to ground at the converter. The screen grid voltage of tube V115 is varied by potentiometer R171 (POLAR OUTPUT, MARK) which is connected in a voltage divider circuit together with resistors R170 and

R172. The potentiometer is adjusted to produce a mark current of about 25 milliamperes.

(3) When a space signal is transmitted, the d-c output voltage will be positive with respect to —150 volts and tube V116 will conduct. A minus 150 volts will then be connected across the polar output circuit and current will flow from ground at J103 to the control unit and back through pin B of receptacle J103 and resistors R190, R168, and R169 to the plate of tube V116 and thence to —150 volts at cathode terminal 8. The voltage drop through resistors R168 and R169 produces a negative grid bias for tube V115 sufficient to cut the tube off. The screen voltage of tube V116 is adjusted by potentiometer R174 (POLAR OUTPUT, SPACE) which is connected in a voltage divider circuit including resistors R173 and R175. An adjustment is made to produce a space current of about 25 milliamperes.

(4) The polar currents of the d-c output circuit are connected through 30-ohm shunt resistor R190 and choke 1–2 of filter Z111 and in the later models through choke 1–2 of a second filter, Z113, similar to filter Z111. These filters reduce the extraneous noise pick-up. The polar signals are connected to pin B of receptacle J103 and through cord assembly W103 to a receptacle which is wired to binding posts marked LINE.

(5) Meter M102 is connected in series with 30,000-ohm resistor R191 and across 30-ohm resistor R190 to read milliamperes directly when the METER B switch (S105) is set in the POLAR position. (See step (3) above.)

c. NEUTRAL TELEGHAPH SIGNALS (1) Tubes V117 and V118 alternately conduct and cut off to produce neutral telegraph signals. As described in *a* above, a negative potential is connected from the output of driver tube V113 (fig. 28) to the control grid of tube V117 when a mark signal is transmitted. This voltage is sufficient to cut tube V117 off. The plate voltage for tube V117 and the grid voltage for tube V118 are obtained from separate points on a voltage divider consisting of resistors R178, R177, R179, and R180 in series across the +275-volt and —400-volt supplies. This arrangement produces a grid control voltage at grid 5 of V118 which is positive with respect to the cathode voltage (—150 volts) when tube V117 is cut off, and is effectively negative when tube V117 conducts.

(2) When tube V117 is cut off and tube V118 is conducting, mark signal current will flow from ground at connector J103 to the teletype equipment and back through pin D of receptacle J103, through choke 4–3 of filter Z111 and choke 4–3 of a second filter Z113 in the later models, through the meter-shunt resistor R118 and tube V118 to —150 volts. The four resistors R184 to R187 inclusive are not strapped out if the teletypewriter station is located within the radio receiving station. By strapping out resistors R184 to R187, the station can be located at the end of a circuit not exceeding 1,800 ohms in resistance or an over-all capacitance equivalent to about 1 mile of 19-gauge cable.

(3) When a space signal is transmitted, tube V117 will conduct, causing the voltage of the grid of tube V118 to go sufficiently negative to cut off tube V118. With this tube cut off, no current will flow in the neutral output circuit.

(4) The screen grid voltage of tube V118 is adjustable by means of potentiometer R182 (NEUTRAL OUTPUT) which is connected in a voltage divider circuit in series with resistors R181 and R183. This control is provided to adjust the loop current to a value of approximately 60 milliamperes. Meter M102 in series with 30,000 ohms (R189) is connected across the 30-ohm meter shunt, R188, to indicate directly in milliamperes when the METER B switch (S105) is set on NEUTRAL (position 4).

85. Tone Oscillator and Radio Receiver Disabling Circuit

a. GENERAL. The tone oscillator and radio receiver disabling circuit (fig. 31) provides an audible means of indicating mark and space intervals by tones in a headphone and a circuit for disabling the two radio receivers when transmitting on a one-way reversible basis. The components of the circuit are assembled as a subunit of the dual diversity converter which is associated with the basic unit by connecting plug R405 to receptacle J106. Three receptacles on the subunit are extended by cable assemblies to other equipments in connec-

tion with Radio Set AN/MRC–2 as follows:

Receptacle	Connect equipment
J402	Disabling relay of radio receiver A.
J403	Disabling relay of radio receiver B.
J404	Telegraph key for emergency hand keying and radio receiver disabling key of the control unit.

b. Tone Oscillator and Emergency Hand Keying. (1) For emergency hand keying, OUTPUT switch S102 of the converter unit (fig. 28) must be set on the fourth step (SPACE). This test position of switch S102 connects the grid of tube V111 to the junction point of resistors R126 and R128 connected across the —150-volt supply. The negative voltage across resistor R126 cuts off tube V111 which in turn cuts off tube V113 and transmits a space signal over the d-c loops. As shown in figure 31, the plate of tube V113 is connected through contacts 5 and 4 of switch S102 (bank B) to the contacts of the telegraph key. The plate circuit of the carrier control mark-hold tube V105 is opened when the OUTPUT switch is in the SPACE position. This prevents tube V105 from attempting to establish a steady mark on the d-c loops when the carrier is shut off.

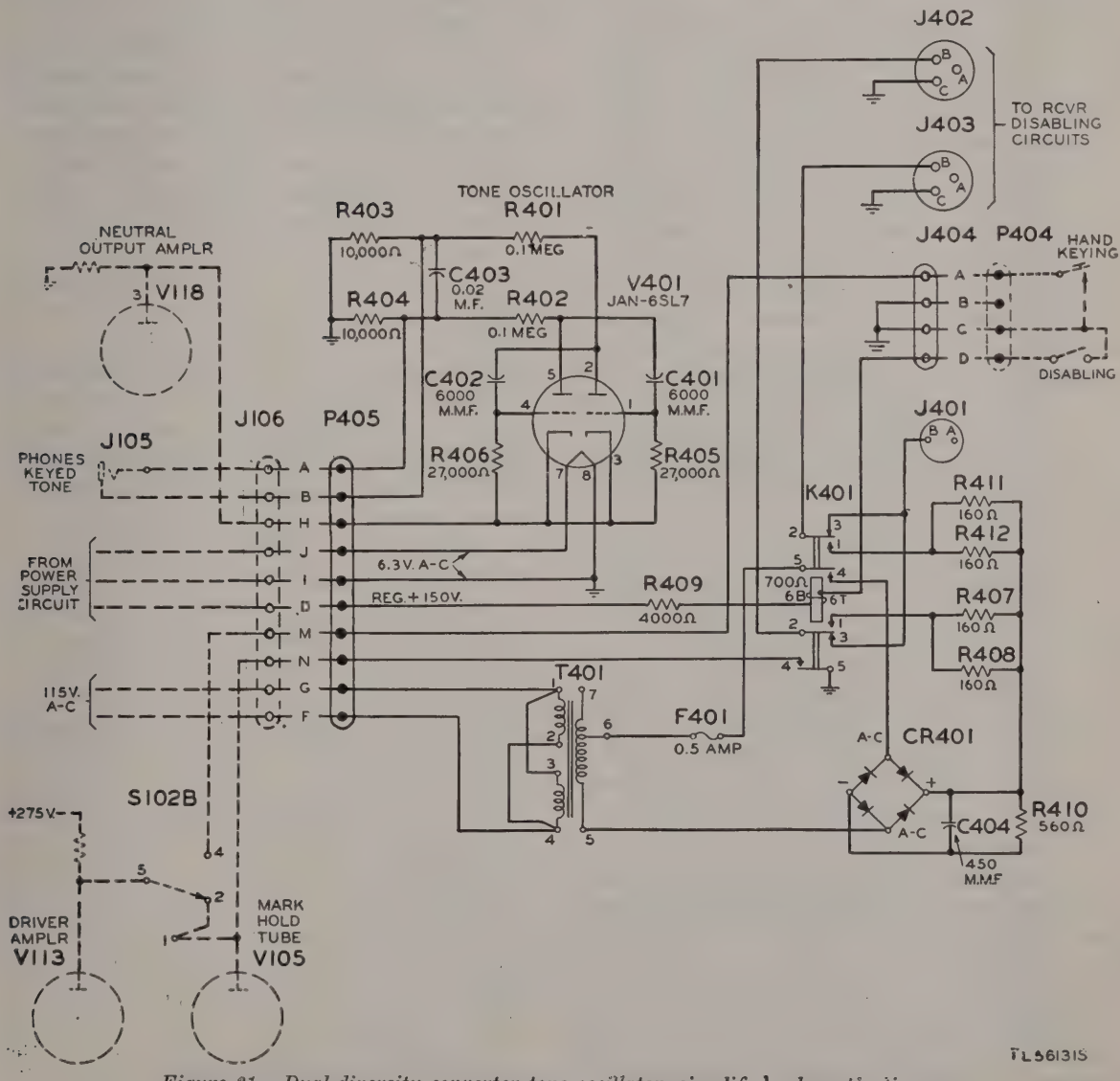

Figure 31. Dual diversity converter tone oscillator, simplified schematic diagram.

(2) The operation of the telegraph key places ground on the plate terminal of driver tube V113, thus changing the potential of the plate from a positive potential to a less positive potential in approximately the same manner as though tube V113 were biased to conduct normally in response to a received mark signal. Accordingly, the operation of the telegraph key results in the neutral output tube V118 conducting to provide marking current, and cutting off (when the key is released) for a space signal. The plate load of V118 is in the order of 1,300 ohms to ground, this resistance including that of the teletypewriter or other receiver equipment.

(3) During normal operation, the mark and space signals at the plate of tube V118 (fig. 31) cause twin-triode relaxation oscillator V401 to produce a tone when a mark signal is keyed, and to cut off during a space interval. In the latter interval, tube V401 is cut off since its plate, grid, and cathode terminals are all at ground or 0-volt potential. During a marking interval, the negative voltage on the plate of the neutral output tube V118 appears as a plate-cathode potential difference for tube V401, causing oscillations to start. Feedback for oscillation is from the plate of one section of the twin triode to the grid of the other section, and vice versa. The frequency of oscillation is determined by the 600-mmf feedback capacitors C401 and C402 and the 27,000-ohm grid leak resistors R405 and R406.

(4) A portion of the output voltage of V401 at the junctions of the 10,000-ohm and 100,000-ohm load resistors in the plate circuit of the oscillator is extended through terminals A and B of P405 and J106 to PHONES KEYED TONE jack J105. A 0.02-mf capacitor, C403, bridged across the monitoring leads, bypasses the higher harmonics of the relatively square-wave output of the relaxation oscillator V401 to produce a more nearly sine wave voltage in the monitoring headphone.

c. DISABLING OF RADIO RECEIVERS. (1) Relay K401 and the relays of the two radio receivers are normally not operated. In this state the radio receivers are connected for reception. With one-way reversible operation (par. 34*c*), the SERVICE switch on the control unit is set at ONE WAY before operation is started. Ground is connected through the contacts of the SERVICE switch to terminal D of J404 (fig. 31) to one end of the winding of relay K401. The other end of the winding of relay K401 is connected to the regulated +150-volt supply in the converter. Relay K401 will therefore operate, and its contacts connect the disabling relays of the two radio receivers to about +20 volts developed across resistor R410 by the output of a small full-wave disk type rectifier, CR401. The disabling relays in the radio receivers are therefore operated and short circuit the receiving antennas. This is necessary to protect the sensitive receiver circuits since the same carrier frequency which is used for reception is also used for transmission to the distant radio receiving station.

(2) The disk type rectifier CR401 is connected to the 50- to 60-cycle secondary voltage of transformer T401 when the contacts of relay K401 are closed in the operated (energized) position. The a-c secondary supply is protected by a fuse F401. The primary a-c voltage for transformer T401 is tapped off the nominal 115-volt, 50- to 60-cycle supply to the converter power unit. This 115-volt supply is opened and closed by the contacts of the AC SUPPLY switch of the converter unit.

(3) The lower contact of relay K401 places ground on plate terminal 8 of tube V105 when the relay is operated. This insures that a steady marking condition is established on the line to the operating shelter when the receiving circuits are cut off.

86. Power Supply Circuit

a. GENERAL. The power supply circuits for the converter are mounted on a separate subassembly in the chassis of the dual diversity converter equipment. The power supply circuit (fig. 32) connects to the basic converter unit through terminal board E301. The power supply unit furnishes +275 volts, −150 volts, −400 volts, +150 volts regulated, and −150 volts regulated to the converter circuits.

b. PRIMARY POWER SUPPLY. The 115-volt, 50- to 60-cycle primary power supply is connected by a cable assembly to receptable J104 which is mounted on the basic converter unit. The two power leads are then connected through filter Z112 (also located in the basic unit) to the power supply unit, and then the contacts of safety interlocks S301 and S302,

and through two 3-ampere fuses, F301 and F302, to the contacts of AC SUPPLY switch S303. When the AC SUPPLY switch is operated, the primary power voltage is connected to the primary winding of transformer T302, thereby energizing the regulated —150-volt and the unregulated —400-volt supplies. Indicator lamp I301 is connected to 6.3-volts induced across winding 5–7 of transformer T302 and will light when the AC SUPPLY switch is ON. Transformer T302 includes three tap connections on the primary winding to provide for a nominal 125-, 115-, or 105-volt input. The primary power source is also extended to the basic unit through pins 9 and 10 of terminal strip E301. The primary winding of transformer T301 also has three connections indicated for different a-c input voltages similar to that of T302. The primary winding is energized when PLATE switch S304 is operated. At this time a panel indicator lamp (red cap) lights. This lamp (I302) is lighted from the 6.3-volt winding, 11–12, of transformer T301.

c. FULL-WAVE RECTIFIER FOR +275-VOLT SUPPLY. Tube V301 together with winding 5–6–7 of transformer T301 is connected to provide a nonregulated +275-volt supply. This supply is filtered by series choke coil L301, and capacitors C301 and C302 which are connected to ground. The filament cathode of tube V301 is energized from the 5-volt winding, 8–9, of transformer T302.

d. FULL-WAVE RECTIFIER FOR —150-VOLT SUPPLY. Tube V302 and winding 8–9–10 of transformer T301 are connected to provide a nonregulated —150-volt supply. This supply is filtered by series choke L302, and capacitors C303 and C304 which are connected to ground. An artificial load of 33,000 ohms is permanently connected to the —150-volt supply lead by bleeder resistor R307.

e. HALF-WAVE RECTIFIER FOR —400-VOLT AND —150-VOLT SUPPLIES. Tube V303 is connected in a half-wave rectifier circuit to provide two negative supplies; a —400-volt supply which is nonregulated and a —150-volt supply which is

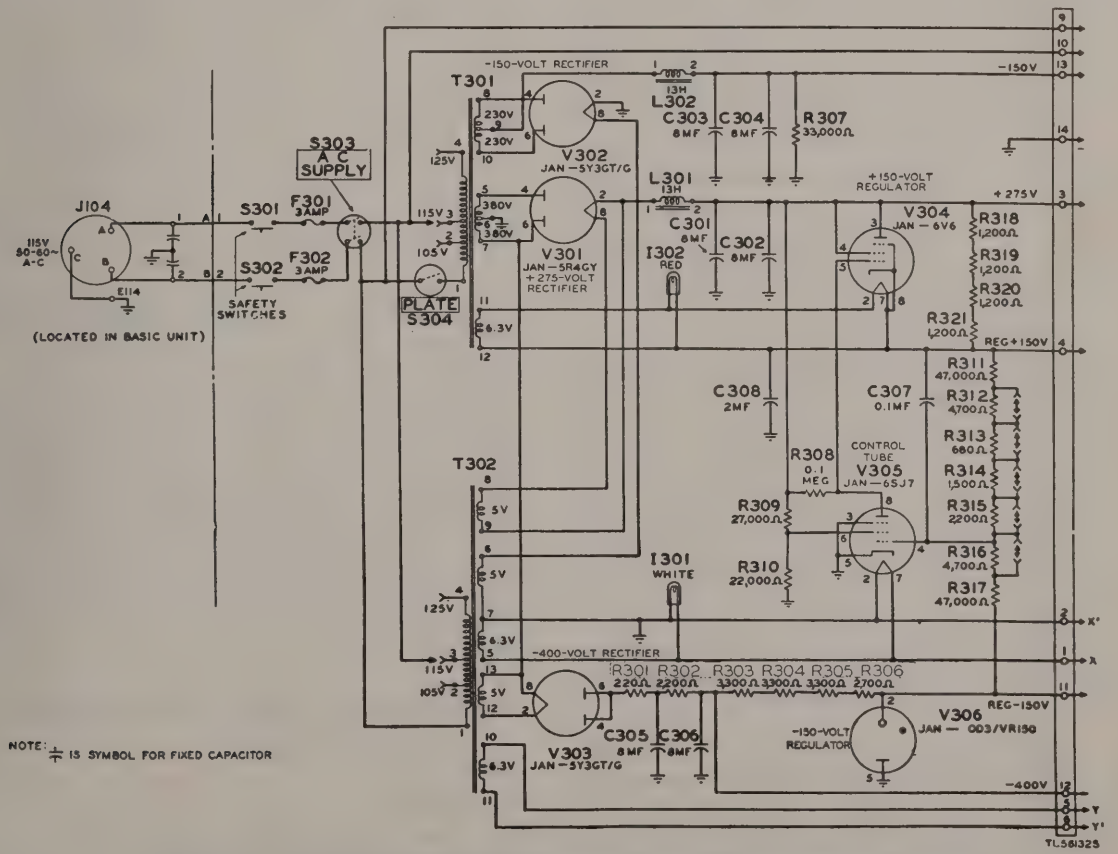

Figure 32. Dual diversity converter power supply, simplified schematic diagram.

regulated. The output of tube V303 is connected through a voltage divider consisting of resistors R301 to R306, inclusive. Resistors R301 and R302 of the voltage divider with capacitors C305 and C306 serve as a filter and provide a −400-volt load point. The voltage at the end of the voltage divider resistors is fixed at −150 volts by the gas regulator tube V306.

f. REGULATED +150-VOLT SUPPLY. (1) A regulated +150-volt supply is obtained from the +275-volt supply through series resistors R318 to R321, inclusive, and the parallel variable impedance tube, V304. The impedance of tube V304 varies in proportion to the plate-cathode current of the tube which is varied by the control grid voltage. The potential connected to control grid 5 of tube V304 is influenced by the plate output of d-c amplifier tube V305 which in turn is affected by the screen grid voltage on terminal 6, and the control grid voltage on terminal 4.

(2) Screen grid 6 of tube V305 is connected to the junction of the voltage-divider resistors R309 and R310 which connect from the +275-volt supply lead to ground. The control grid, terminal 4, is connected to a voltage divider consisting of resistors R311 to R317, inclusive, which are connected in series between the regulated +150-volt and regulated −150-volt supply leads. This latter circuit arrangement controls the voltage difference between the REG +150V and the REG −150V outputs.

(3) A tendency for either the screen or control grid voltage to become more positive results in a larger plate-cathode current for tube V305. The increased plate current produces a larger voltage drop across the plate load resistor, R308, which results in impressing a less positive voltage on the control grid of tube V304. The reduction of the control grid voltage on tube V304 is accompanied by a decreased plate-cathode current for the tube, or conversely an increase in impedance. This reduces the tendency of the regulated +150-volt supply voltage to rise.

(4) The above sequence of events occurs if the +275 volts tends to increase in a positive direction, or if the difference between the regulated +150-volt and the regulated −150-volt supply voltages tend to increase. The changes occur almost instantaneously, thereby holding the +150 volts practically constant.

(5) An opposite effect is produced if the +275 volts tend to decrease, or if the regulated −150-volt or regulated +150-volt potential tends to change in a direction which reduces the difference in voltage between the two. In these cases, however, the plate-cathode current of amplifier tube V305 is reduced, resulting in a higher plate voltage which produces a higher grid voltage at tube V304. This increases the plate-cathode current of tube V304 and reduces the impedance of the tube to offset the tendency for the +150 volts to decrease.

(6) Capacitor C307 is connected from the +150-volt lead to the grid of tube V305 to provide a lower impedance path for a-c variations. Accordingly, the regulating circuit tends to smooth out a-c ripple and lower frequency variations arising from power line voltage changes, load changes, etc.

(7) Resistors R312 to R316, inclusive, are strapped in the factory as required to produce a regulation which maintains the +150-volt supply to within ±3 volts of the regulated −150-volt supply. If necessary (as a result of replacing parts in the circuit, for example), these resistors can be strapped differently in the field to establish the regulation of the +150-volt supply within the required limits. If the ±150-volt supply voltage is too high, short out resistors R312 to R315 as required to meet the above limit. If the voltage is too low, short out resistor R316. This will raise the voltage. Then short out resistors R312 to R315 as required to meet the 3-volt difference.

g. HEATER SUPPLIES. There are two 6.3-volt heater supplies, one from winding 5–7 and the other from winding 10–11 of transformer T302. The first heater supply is identified as the X–X prime supply. One wire (X prime) is grounded in the power supply unit. The second heater supply is identified as the Y–Y prime supply. This supply is not grounded in the power supply circuit.

Section XIV. THEORY OF CONTROL UNIT

87. General

The components of the frequency shift control equipment are shown in the block diagram (fig.

33) and consist of a receiving circuit, sending circuit, extension circuit and a power supply unit. Figure 34 is a simplified schematic showing the receiving, the sending, and the extension circuits arranged for full-duplex operation. A simplified schematic of the power supply unit is shown in figure 42 and is described in paragraph 93

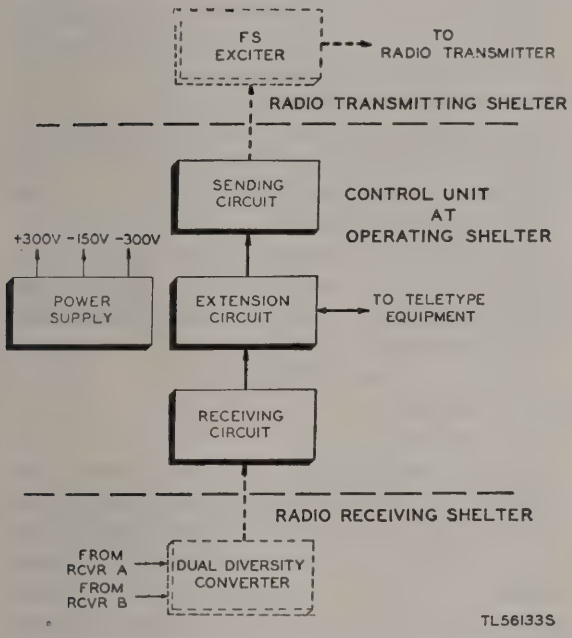

Figure 33. Control Unit C–292/TRA–7, block diagram.

88. Receiving Circuit

a. The receiving circuit (fig. 34) consists essentially of a four-tube circuit which converts the incoming polar signals from the dual diversity converter to neutral d-c signals for actuating the magnet of a teletypewriter or of a typing reperforator. Marking signals of approximately 25 milliamperes pass through the primary coil of transformer T101 in one direction and spacing signals of approximately 25 milliamperes pass through the primary coil of transformer T101 in the opposite direction. The marking and spacing signals are applied to the control unit from the dual diversity converter whose output circuit is described in paragraph 84.

b. As marking signal current passes through the primary of coil T101, a voltage pulse is induced in the transformer secondary. This voltage is impressed between the control grid and cathode of tube V101. (See fig. 34.) The voltage pulse at the secondary of transformer T101 is in a direction such as to make the control grid of tube V101 negative with respect to its cathode, thus reducing the flow of plate current through resistors R113 and R114 to zero. Similarly, as a spacing signal current passes through the primary of coil T101, the control grid of tube V101 is momentarily made positive with respect to the cathode, causing plate current to flow through resistors R113 and R114. In this way the potential at the plate of tube V101 is increased during a mark signal and is reduced during a space signal. The control grid of tube V103 is connected to the junction point of resistors R115 and R116 which comprise a voltage divider connected between a fixed —300-volt source and the plate of tube V101. Resistors R115 and R116 are so proportioned that the voltage at the control grid of tube V103 becomes positive with respect to the cathode when the plate voltage of tube V101 is increased during a mark signal and it becomes negative with respect to the cathode during a space signal. Thus tube V103 will conduct during a mark signal and the voltage drop across resistors R123 and R124 in the plate circuit will increase, thereby reducing the voltage at the plate of tube V103. This causes the potential at the movable arm of potentiometer R126 (BALANCE ADJ) to become more negative and in turn reduces the voltage applied to the voltage divider consisting of resistors R106 and R107 connected between the movable arm of the BALANCE ADJ potentiometer and the —150-volt source. Varying the position of the movable arm on the BALANCE ADJ potentiometer allows the effect of the mark and space signals to be made approximately equal. The voltage at the junction of the voltage divider R106 and R107 is applied through resistor R105 to one side of capacitor C101. This charges capacitor C101 and the charge sustains the grid of tube V101 negative or positive with respect to the cathode as the incoming mark or space signal pulse decreases in value.

c. As a result of the action described (*b* above) a potential, negative with respect to its cathods, is applied through resistor R105, secondary of transformer T101, and resistors R103 and R102 to the control grid of tube V101 when

a mark signal occurs. This biases tube V101 well beyond cut-off. Tube V101 remains in a nonconducting condition until a change in the direction of current flow through the primary winding of transformer T101 occurs. When a current in the opposite direction flows through the primary winding of transformer T101, that is, when a spacing signal is received from the dual diversity converter, the resulting positive voltage pulse in the transformer secondary will cause tube V101 to become conducting. In addition, a positive biasing voltage is fed back through tube V103 and the voltage divider circuits to the control grid of tube V101 in a manner similar to that described in *b* above. This maintains tube V101 in a spacing (conducting) condition until a signal of the opposite polarity is received.

d. The control grid of tube V104 is connected to the junction of resistors R128 and R129. These resistors are connected between the fixed —300-volt source and the plate of tube V101 in a manner similar to the connection of resistors R115 and R116. (See *b* above.) Therefore, tube V104 also becomes conducting when a marking signal is received and nonconducting when a spacing signal is received. The plate of tube V104 (fig. 34) is connected for a full-duplex connection to the receiving extension jacks REC EXT through the 500-ohm resistor R130 and from the REC EXT jacks to ground through the 500-ohm resistor R131. When a mark signal is received, the extension current passes through the magnet of the receiving teletypewriter. The amount of current flowing through the magnet of the receiving teletypewriter is controlled by the potential applied to the screen grid of tube V104. This potential is in turn controlled by potentiometer R110 (EXTENSION CURRENT) which is part of the voltage divider consisting of resistors R108, R109, R110, and R111 connected across —150 volts and ground. When tube V104 stops conducting, the current through the magnet of the receiving teletypewriter will drop to zero, indicating a space condition to the teletypewriter.

e. Double-diode tube V102 serves to level off the peaks of the incoming signals. The lead from the secondary winding of transformer T101 (connected to the grid of tube V101) is connected to the plate of one diode and the cathode of the other diode of tube V102. The cathode of the diode with its plate connected to the grid circuit of the tube V101 is connected to a negative potential of approximately —135 volts (—150 volts +15 volts) and the plate of the other diode is connected to a negative potential of approximately —165 volts (—150 volts —15 volts). When the secondary voltage rises on a marking polar signal to a value more negative than the potential on the plate of the 5–8 section of diode tube V102, this section becomes conducting and prevents any further increase in the voltage applied to the grid of tube V101. When the secondary voltage rises on a spacing polar signal to a value more positive than the potential on the cathode of the 3–4 section of diode tube V102, this section of the diode becomes conducting and prevents any further increase in the positive potential applied to the grid of tube V101. This action prevents peaks in voltage which might cause the circuit to be accidentally locked in either a marking or a spacing condition.

89. Sending Circuit

a. The sending portion of the control unit consists essentially of a three-tube circuit; two beam power tubes, one for transmitting mark signals and the other for transmitting space signals; and an amplifying tube actuated directly from the contacts of the sending teletypewriter.

b. When the sending contacts of a teletypewriter connected to the SEND EXT jacks (fig. 35) are closed, the control grid of tube V107, connected through resistors R136 and R161 to ground and through resistor R137 to —300 volts, will be positive relative to the cathode, which is connected to —150 volts. This causes tube V107 to conduct. When the sending contacts of the teletypewriter are open (space signal), the control grid of tube V107 will be negative relative to the cathode and tube V107 will be biased past cut-off. With tube V107 conducting (mark signal), the increased voltage across resistors R140 and R141 in the plate circuit causes the control grid of tube V106 to be negative in relation to the —150-volt potential on the cathode of tube V106.

c. With tube V107 not conducting (space signal), there is no voltage drop due to plate current across resistors R140 and R141. Thus, the control grid of tube V106 will be positive

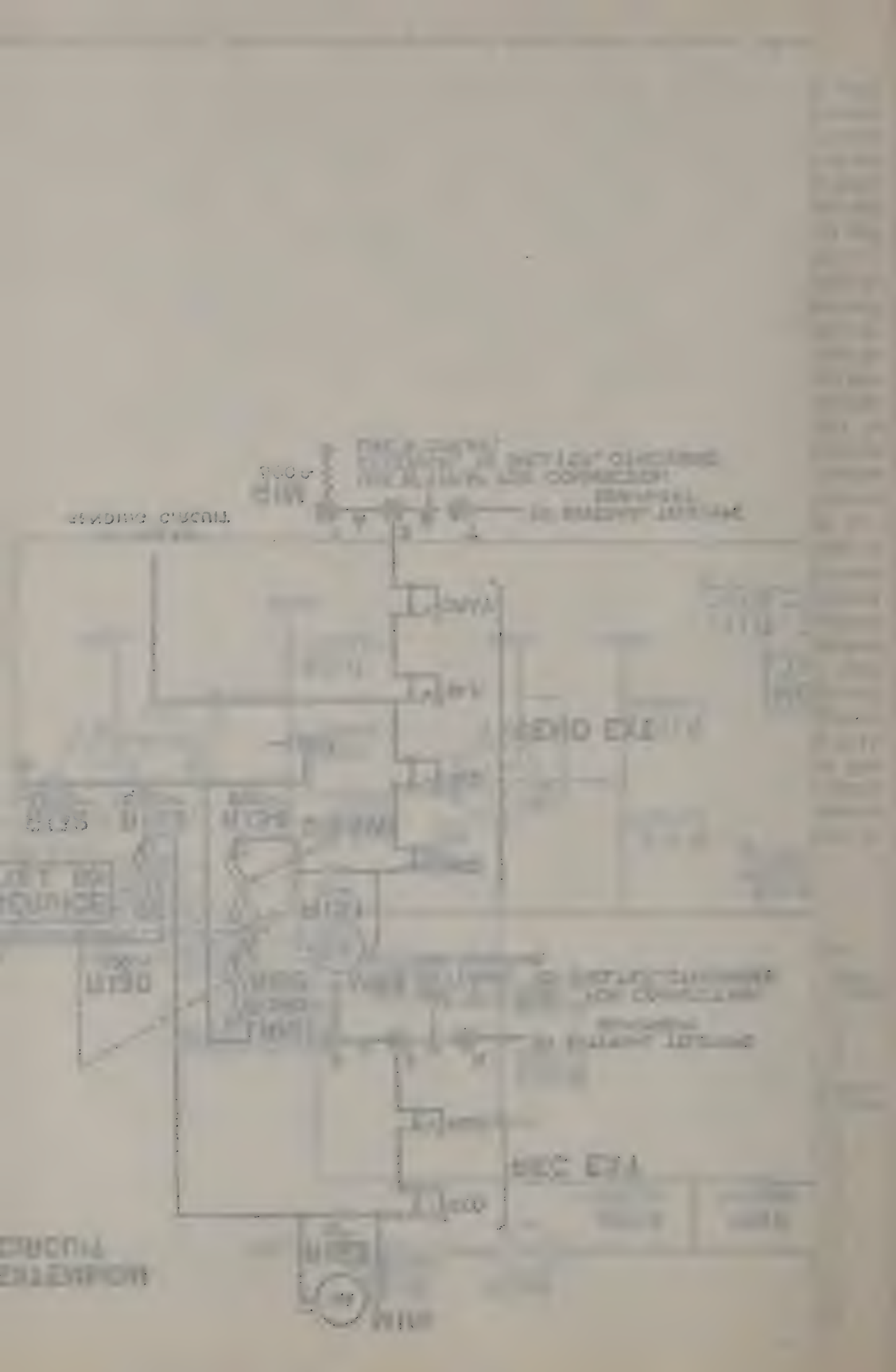

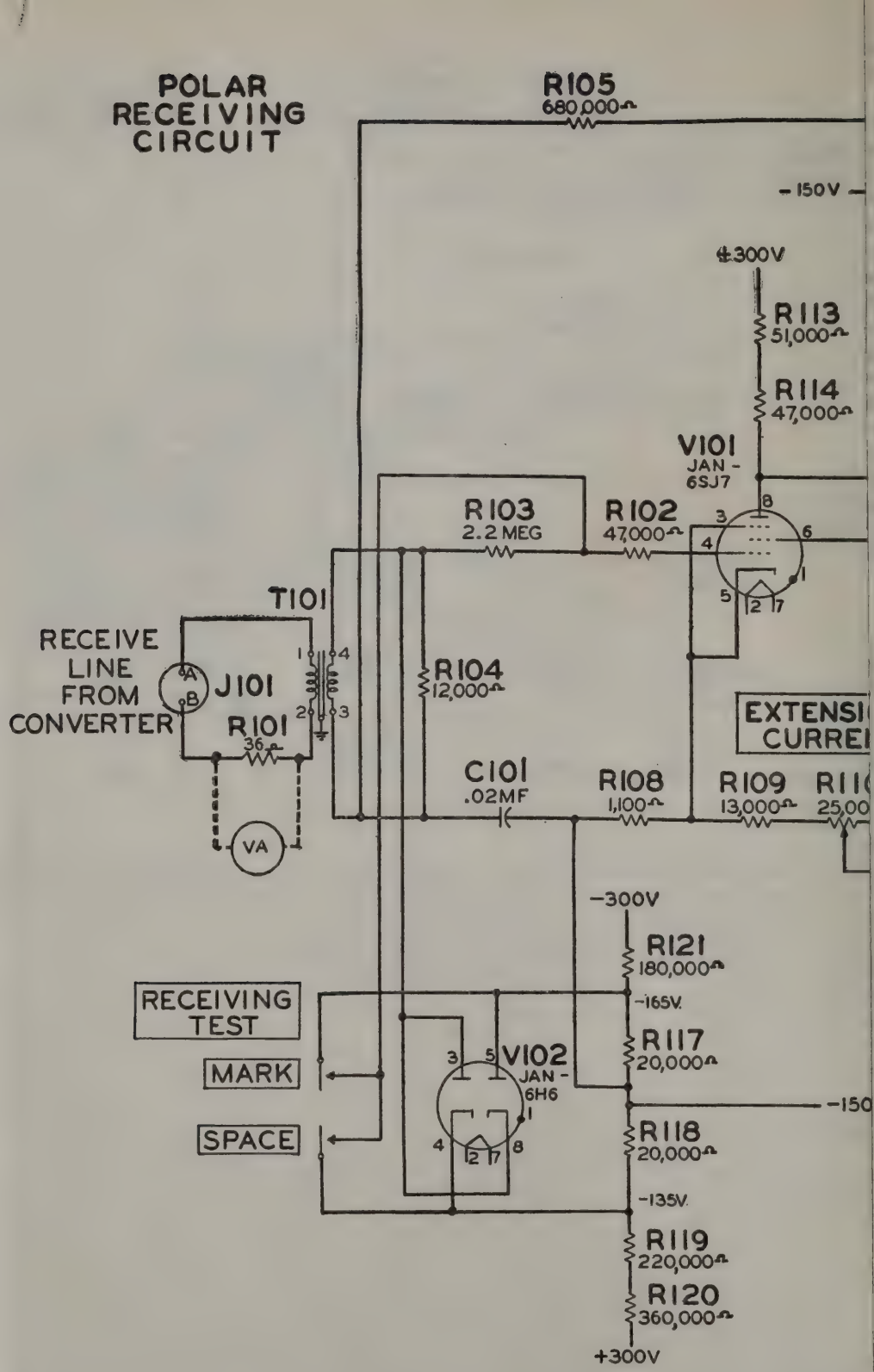
POLAR
RECEIVING
CIRCUIT
R105
680,000Ω
-150V
+300V
R113
51,000Ω
R114
47,000Ω
V101
JAN-
6SJ7
R103
2.2 MEG
R102
47,000Ω
T101
RECEIVE
LINE
FROM
CONVERTER
J101
R101
36Ω
R104
12,000Ω
C101
.02MF
R108
1,100Ω
R109
13,000Ω
EXTENSI
CURRE
VA
-300V
R121
180,000Ω
-165V.
RECEIVING
TEST
MARK
SPACE
V102
JAN-
6H6
R117
20,000Ω
-150
R118
20,000Ω
-135V.
R119
220,000Ω
R120
360,000Ω
+300V

Figu

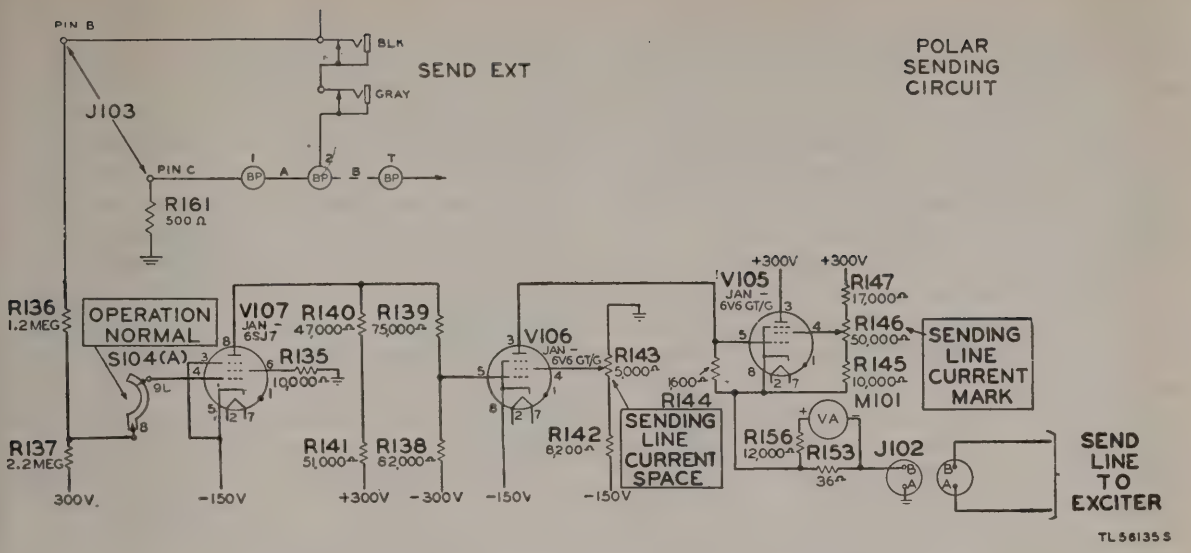

Figure 35. Control unit sending circuit, simplified schematic diagram.

in relation to the —150-volt potential on the cathode, and tube V106 will conduct. In this latter case plate current for a spacing signal will flow from ground (terminal A) on jack J102 over the send line to the frequency shift exciter, back to terminal B on jack J102 and through resistor R144 and the plate circuit of tube V106 to the —150-volt supply at the cathode of tube V106. This flow of current through resistor R144 places a negative potential on the control grid of tube V105 in respect to its cathods, thereby biasing this tube to cut-off.

d. With tube V106 not conducting (teletypewriter sending contacts closed for a marking signal), there will be no current flow through resistor R144, and therefore the control grid of V105 will be at the same potential as the cathode. Thus, current for a marking signal will flow from the +300-volt supply at the plate of tube V105 to the cathode, then out over the send line from jack J102 (terminal B) to the frequency shift exciter and back to terminal A on jack J102 to ground.

e. Polar signals are thus sent over the send line in one direction for mark signals and in the other direction for space signals. These polar signals applied to the send line control the diode in the frequency shift exciter as explained in paragraphs 71 through 76. The action of this diode is such that it causes the polar signals to have a spacing bias. Marking polar signals of 20 milliamperes (Meter M101 indication ±60) and spacing polar signals of 25 milliamperes (Meter M101 indication —75) are used to effectively obtain zero bias in the frequency shift exciter.

90. Extension Circuits

a. Figure 36 is a simplified schematic of the control unit extension circuit arranged for full-duplex operation. Operation of tube V104 has been previously explained in paragraph 88 covering the receiving circuit, and the operation of tube V107 has been explained in paragraph 89 covering the sending circuit. The operating condition, full-duplex, half-duplex, or one-way reversible, is under control of SERVICE Switch S102. If the teletypewriters are located in the shelter, binding posts 3 and 4 are strapped to complete the circuit to ground through resistor R131, for the receiving teletypewriter, and binding posts 1 and 2 are strapped to complete the circuit to ground through resistor R161 for the sending teletypewriter. If external telegraph equipment is used, the straps snown at *A* are removed and the straps shown at *B* are connected. External receiving telegraph equipment lines are connected to R and ground, and external sending telegraph equipment lines are connected to T and ground, thus completing the circuits. The current in the receive extension is controlled by a voltage applied to the screen grid of tube

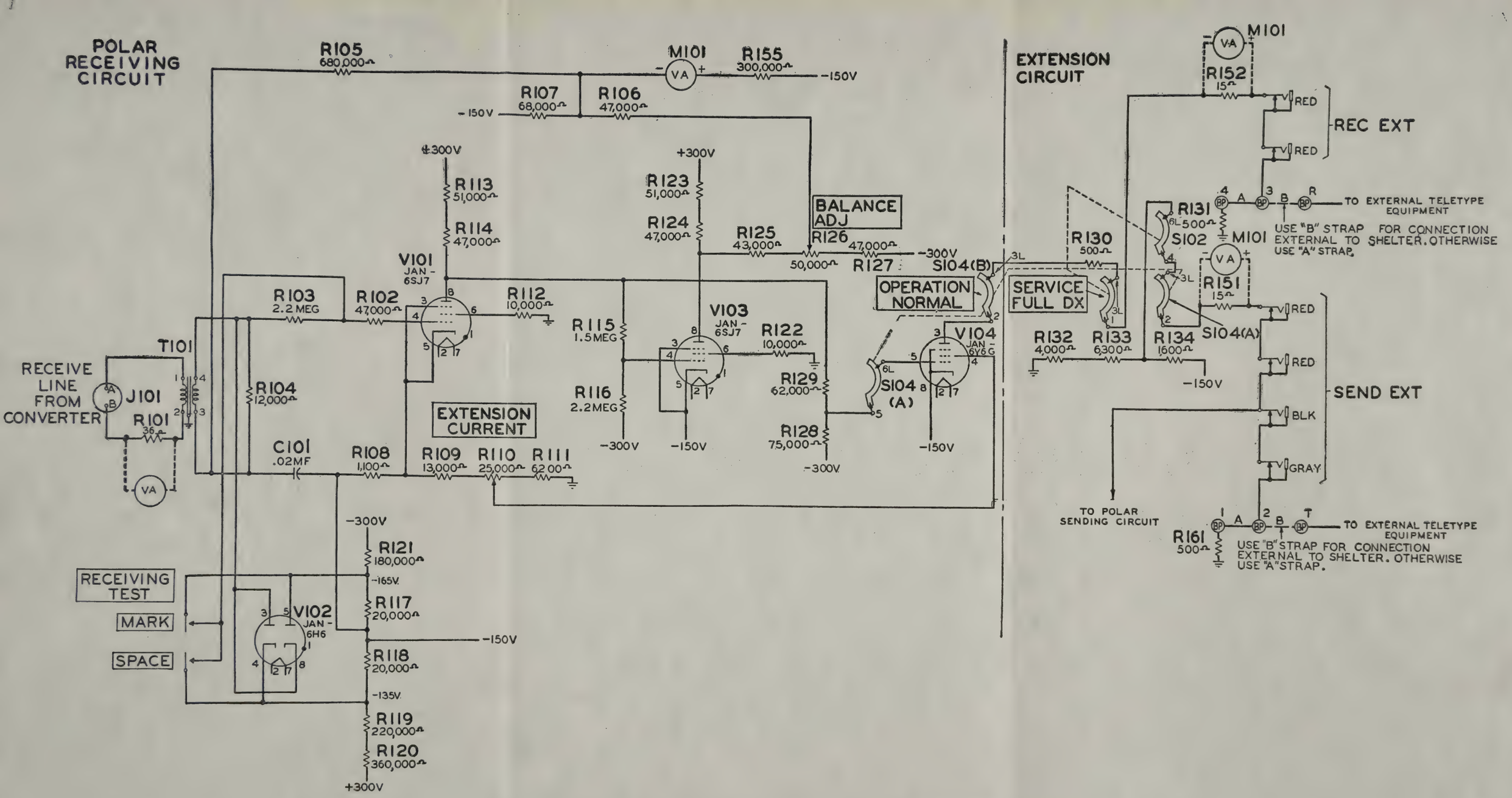

Figure 34. Control unit receiving circuit, arranged for full-duplex operation, simplified schematic diagram.

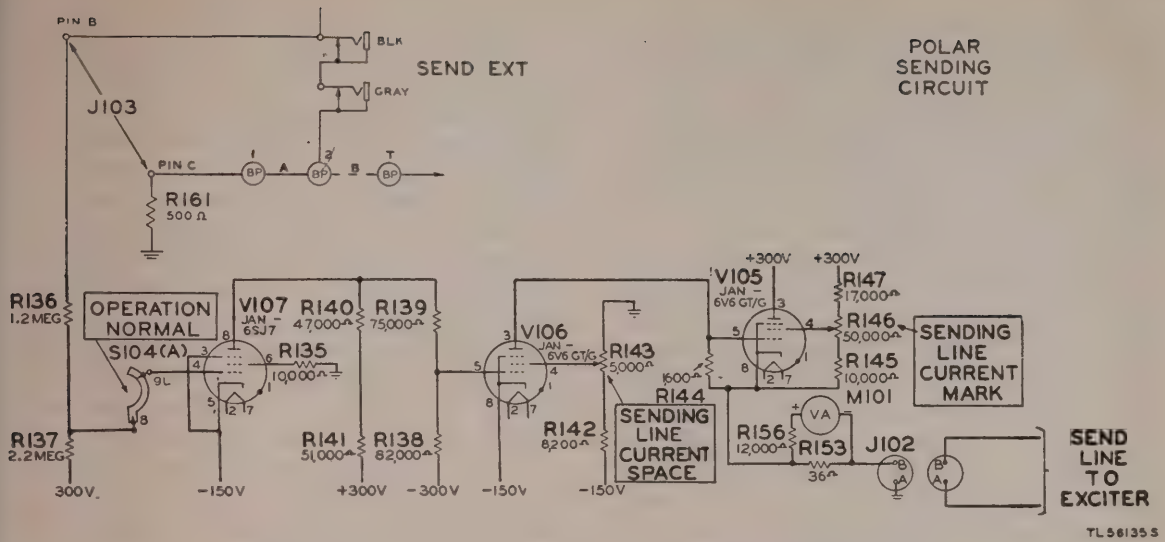

Figure 35. Control unit sending circuit, simplified schematic diagram.

in relation to the —150-volt potential on the cathode, and tube V106 will conduct. In this latter case plate current for a spacing signal will flow from ground (terminal A) on jack J102 over the send line to the frequency shift exciter, back to terminal B on jack J102 and through resistor R144 and the plate circuit of tube V106 to the —150-volt supply at the cathode of tube V106. This flow of current through resistor R144 places a negative potential on the control grid of tube V105 in respect to its cathods, thereby biasing this tube to cut-off.

d. With tube V106 not conducting (teletypewriter sending contacts closed for a marking signal), there will be no current flow through resistor R144, and therefore the control grid of V105 will be at the same potential as the cathode. Thus, current for a marking signal will flow from the +300-volt supply at the plate of tube V105 to the cathode, then out over the send line from jack J102 (terminal B) to the frequency shift exciter and back to terminal A on jack J102 to ground.

e. Polar signals are thus sent over the send line in one direction for mark signals and in the other direction for space signals. These polar signals applied to the send line control the diode in the frequency shift exciter as explained in paragraphs 71 through 76. The action of this diode is such that it causes the polar signals to have a spacing bias. Marking polar signals of 20 milliamperes (Meter M101 indication ±60) and spacing polar signals of 25 milliamperes (Meter M101 indication —75) are used to effectively obtain zero bias in the frequency shift exciter.

90. Extension Circuits

a. Figure 36 is a simplified schematic of the control unit extension circuit arranged for full-duplex operation. Operation of tube V104 has been previously explained in paragraph 88 covering the receiving circuit, and the operation of tube V107 has been explained in paragraph 89 covering the sending circuit. The operating condition, full-duplex, half-duplex, or one-way reversible, is under control of SERVICE Switch S102. If the teletypewriters are located in the shelter, binding posts 3 and 4 are strapped to complete the circuit to ground through resistor R131, for the receiving teletypewriter, and binding posts 1 and 2 are strapped to complete the circuit to ground through resistor R161 for the sending teletypewriter. If external telegraph equipment is used, the straps snown at *A* are removed and the straps shown at *B* are connected. External receiving telegraph equipment lines are connected to R and ground, and external sending telegraph equipment lines are connected to T and ground, thus completing the circuits. The current in the receive extension is controlled by a voltage applied to the screen grid of tube

V104 by the movable arm of the potentiometer R110 (EXTENSION CURRENT) which is a part of the voltage divider consisting of resistors R108, R109, R110, and R111. There is no control of the current in the send extension since a fixed point is used on the voltage divider consisting of resistors R132, R133, and R134 bridged across —150 volts and ground.

b. Figure 37 shows the circuit arrangement of the extension circuit for half-duplex and one-way reversible service. The send and receive current in the extension circuit in this case is under the control of the movable arm on potentiometer R110 (EXTENSION CURRENT).

c. When the extension is arranged for half-duplex service, the receiving operator at the terminal can quickly interrupt the sender when it becomes necessary to transmit in the reverse direction. To interrupt, the receiving operator opens the extension circuit at his end by operating the break key of the teletypewriter. Under this condition, a space signal is transmitted to the distant terminal. The sending teletypewriter will no longer print local copy indicating that the receiving operator wishes to interrupt.

d. The extension circuit arrangement is the same for one-way reversible operation as for half-duplex but with the addition of the TRANSMITTER control in the operating shelter. (See fig. 38.) When the SERVICE key is operated to ONE WAY and the TRANSMITTER key to ON, a circuit is closed to operate relay K401 in the tone oscillator circuit of the dual diversity converter. When this relay is operated, it applies a potential to operate the receiver disabling relays in the two Radio Re-

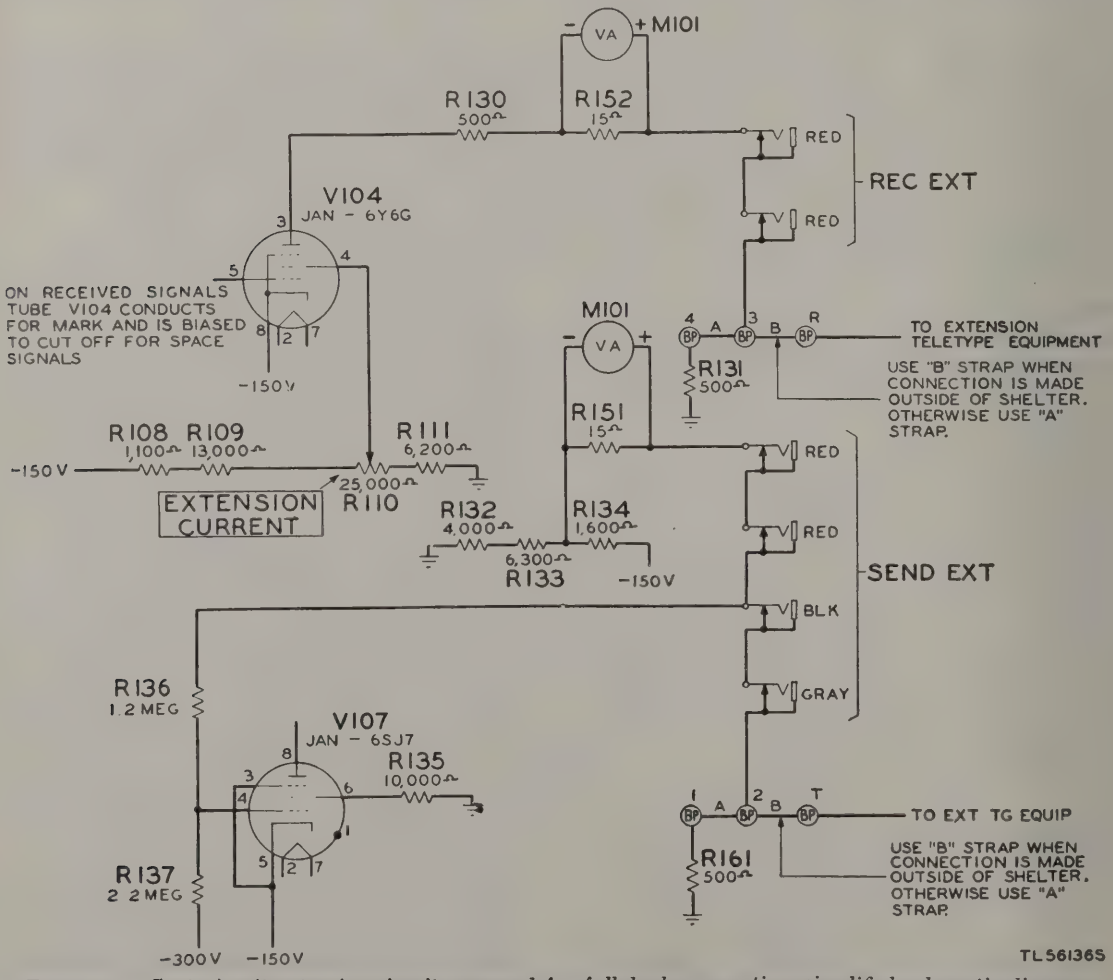

Figure 36. Control unit extension circuit arranged for full-duplex operation, simplified schematic diagram.

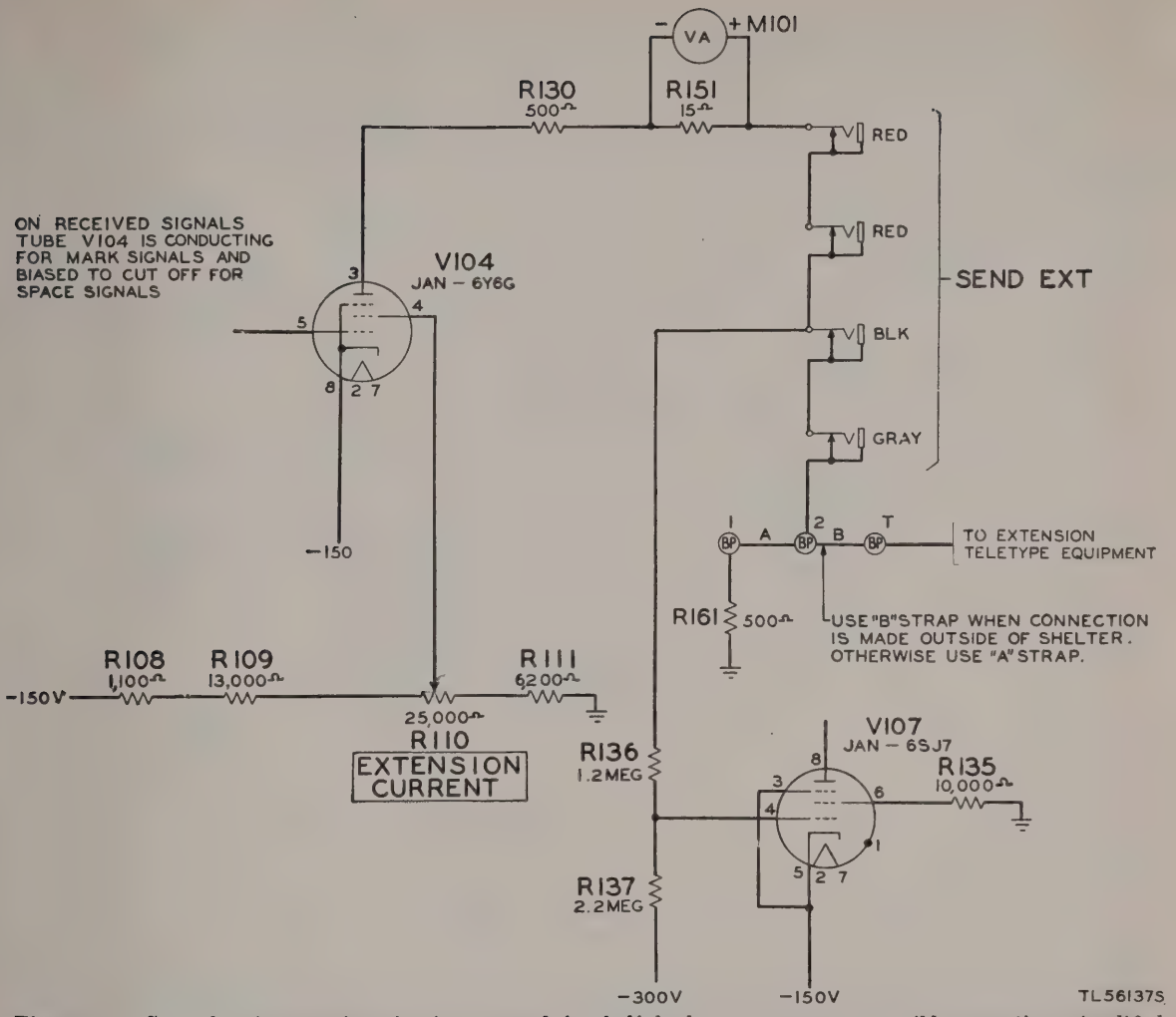

Figure 37. Control unit extension circuit arranged for half-duplex or one-way reversible operation, simplified schematic diagram.

ceivers R–182( )/MRC–2. At the same time, relay K101 in the keying circuit of the frequency shift exciter is operated. This relay applies power to tubes V101 and V102 in the frequency shift exciter to condition the circuit for sending. Sending can occur only from the terminal when the TRANSMITTER key of the control unit is operated to ON. When the TRANSMITTER key is operated to its off position, relay K101 in the frequency shift exciter releases as well as relay K401 in the dual diversity converter. When relay K101 in the frequency shift exciter releases, is disables the transmitter. When relay K401 in dual diversity converter releases, it releases the receiver disabling relays in the two Radio Receivers R–182 ( ) /MRC–2. Thus, the terminal is restored to the receiving condition.

91. Emergency Operation, C-W Keying

a. When the OPERATION knob on Control Unit C–292/TRA–7 is turned to the EMERG CW position on the dual diversity converter and the OUTPUT knobs in the SPACE position, the keying of the transmitter may be done manually at the receiving shelter. These manually keyed signals cause the dual diversity converter to transmit polar signals in the same manner as described in paragraph 84. These signals cause tubes V101, V103, and V104 in the receiving circuit of the control unit to function

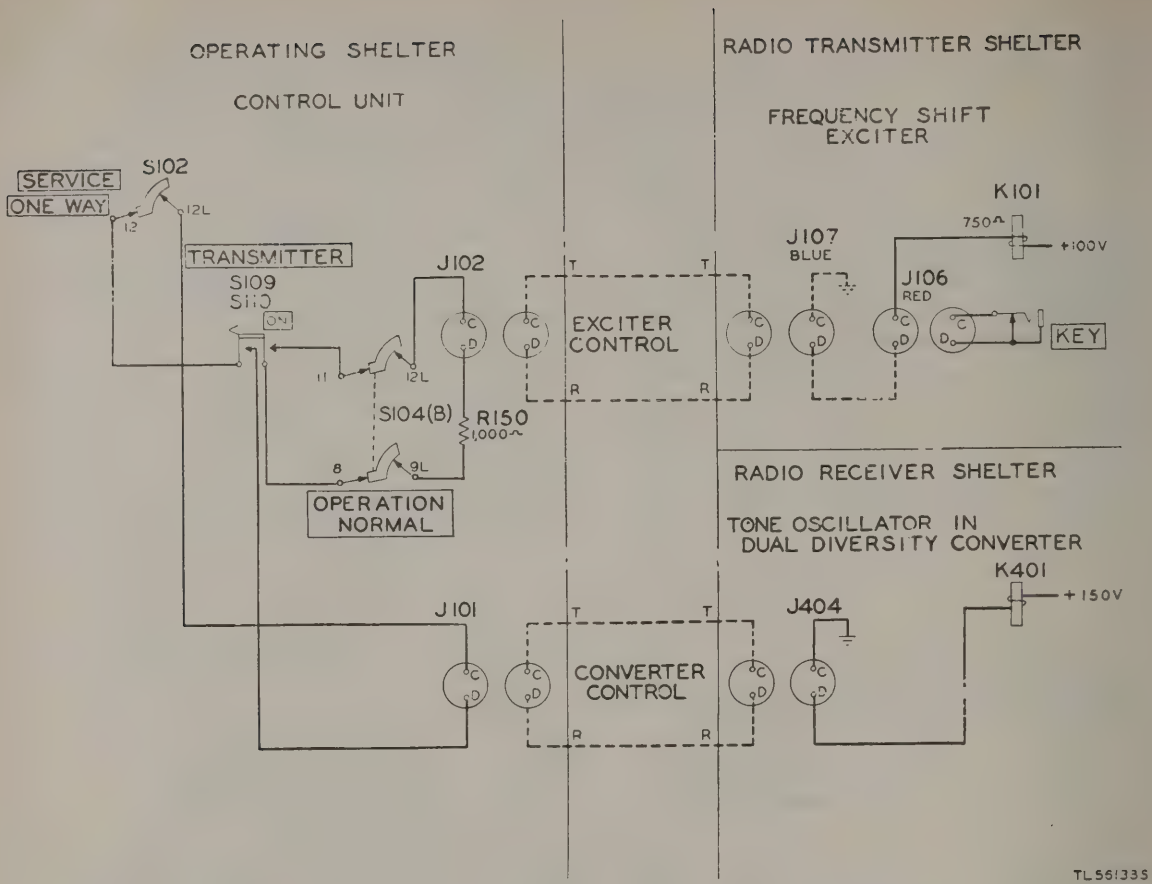

Figure 38. Control unit circuit for one-way reversible operation.

as described in paragraph 88. Figure 39 is a schematic diagram of the output of the control unit receiving circuit arranged for this condition of operation.

b. The plate of tube V104 is connected through resistor R149, the OPERATION switch (in EMERG CW position) and through resistor R150 over the control leads to the frequency shift exciter in the transmitting shelter. At the transmitting shelter the control leads are connected through connector jacks J107 and J106, the normally made contacts of the jack marked KEY, to one end of the winding of relay K101. The other end of the winding of this relay is connected to a source of positive nonregulated voltage.

c. When an incoming mark signal is received and tube V104 is conducting (fig. 40), —150 volts is connected through tube V104, resistors R149 and R150, and over the control leads to the transmitting shelter to the winding of relay K101. The operation of relay K101 causes the radio transmitter to send out its normal frequency (mark signal). When tube V104 is biased to cut-off, relay K101 is released and no carrier frequency is transmitted from the control unit.

d. The transmitter may also be keyed manually in the transmitting shelter by inserting the telegraph key plug into the jack marked KEY on Junction Box J–207/MRC–2 and operating the TEST key on the exciter unit to the MARK position. Depressing the key closes the circuit through the winding of relay K101 to ground, and releasing the key opens the circuit. The keying operation may be checked by observing the BUFFER INDICATOR lamp, which should blink on when the key is depressed and off when the key is released.

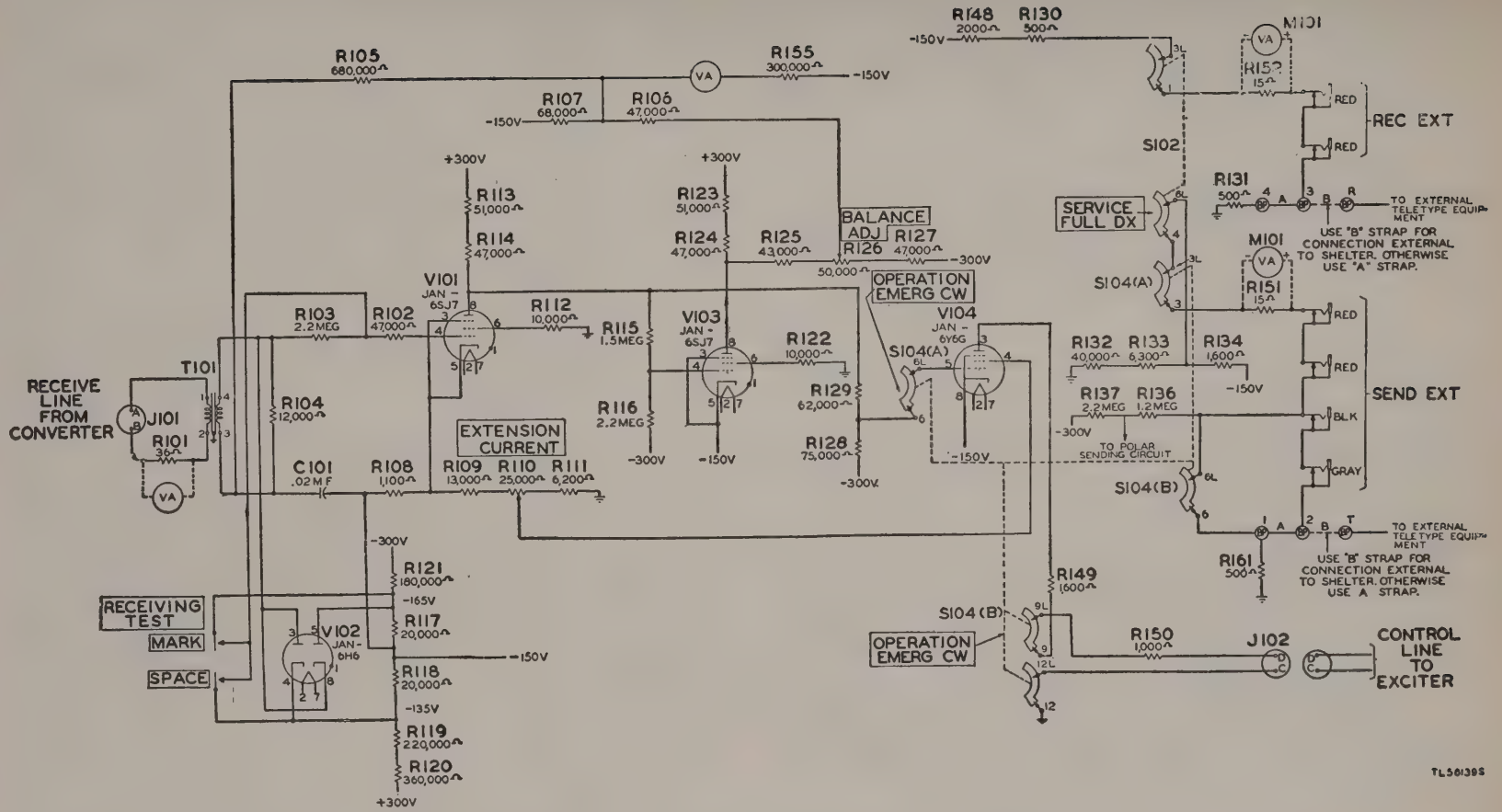

Figure 39. Control unit receiving circuit arranged for emergency c-w operation.

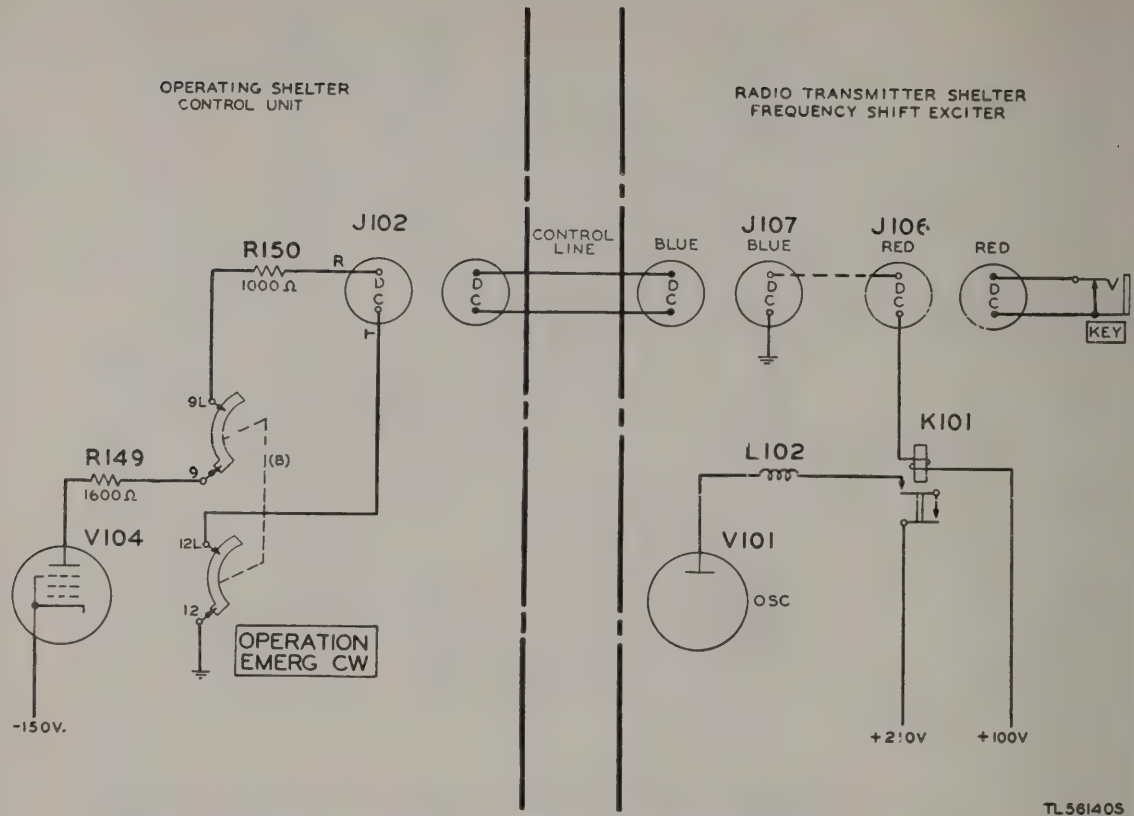

Figure 40. Keying control circuit for emergency operation, simplified schematic design.

92. Emergency Frequency-Shift Operation

a. When the OPERATION knob on the control unit is turned to the EMERG FS position, the transmitter may be keyed manually at the receiving shelter for emergency frequency-shift operation or this switch position may be used to allow this terminal to function as a radio relay point. Figure 41 is a schematic diagram of the control unit arranged for this condition. When this switch position is used for manual keying, the manually keyed signals cause the dual diversity converter to transmit polar signals in the same manner as described in paragraph 84. These polar signals cause tubes V101, V103, and V104 in the control unit receiving circuit to function as described in paragraph 88.

b. The EMERG FS position of the OPERATION knob disconnects the control grid of tube V104 from the point between R128 and R129 and connects it to the —150-volt supply to keep tube V104 conducting and thereby preventing the receiving teletypewriter from running open. In addition, this position of the OPERATION switch places a short circuit across the send contacts of the sending teletypewriter and 500-ohm resistor R161. With this circuit condition, the teletypewriter at the operating shelter will not transmit.

c. The junction point between resistors R128 and R129 is connected to the control grid of tube V107 so that the operation of tube V107 is under control of tube V101. When tube V101 conducts, tube V107 will be biased to cut-off by the increased voltage drop across resistors R113 and R114. When tube V101 is biased to cut-off, tube V107 will conduct. Tubes V106 and V105 are in turn controlled by tube V107 and will conduct or not conduct to key the frequency shift exciter as described in paragraph 89.

d. When the OPERATION knob is tuned to the EMERG FS position and the terminal equipment is used as a radio relay point, the

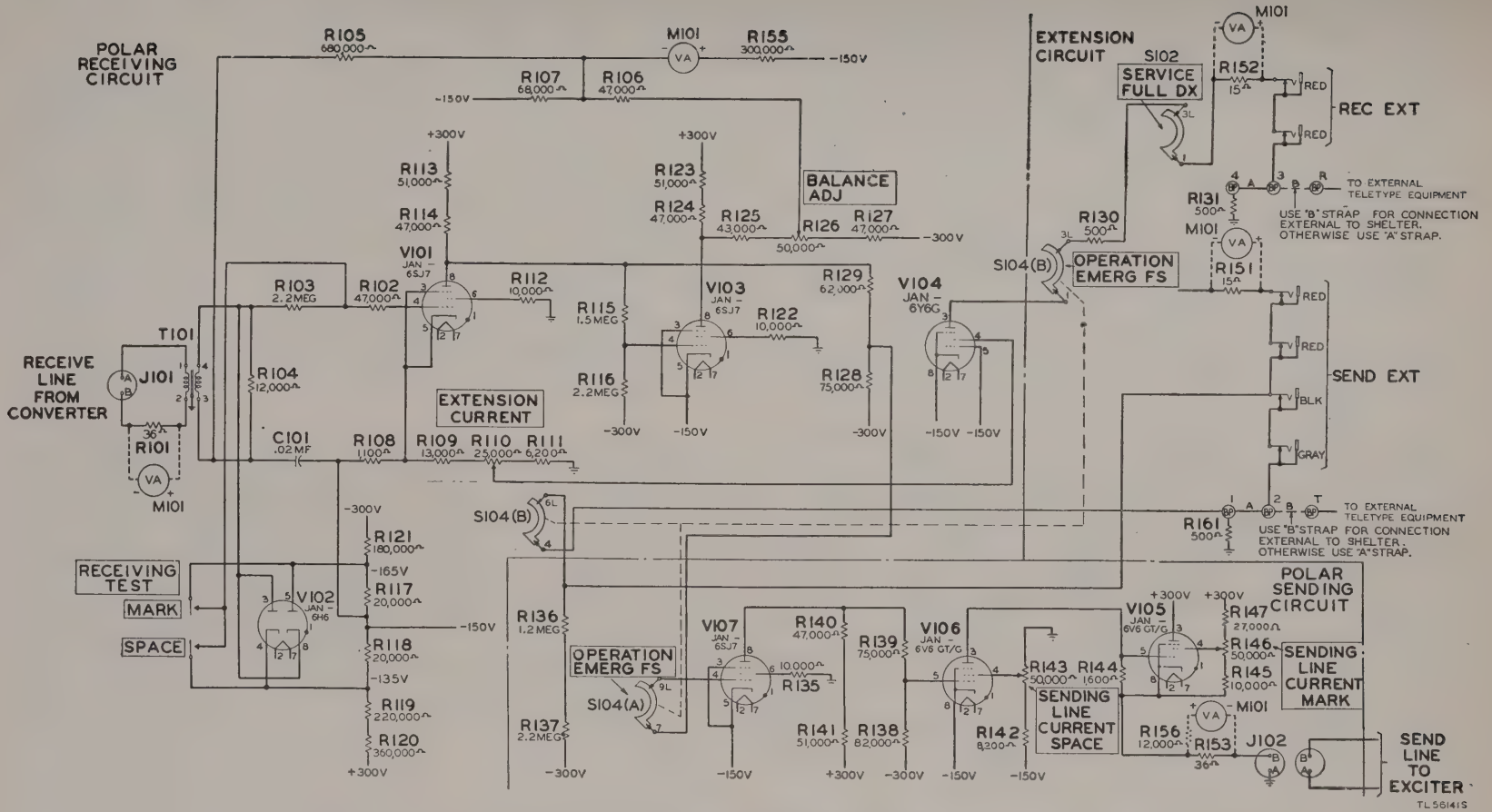

Figure 41. Control unit arranged for emergency f-s operation, simplified schematic diagram.

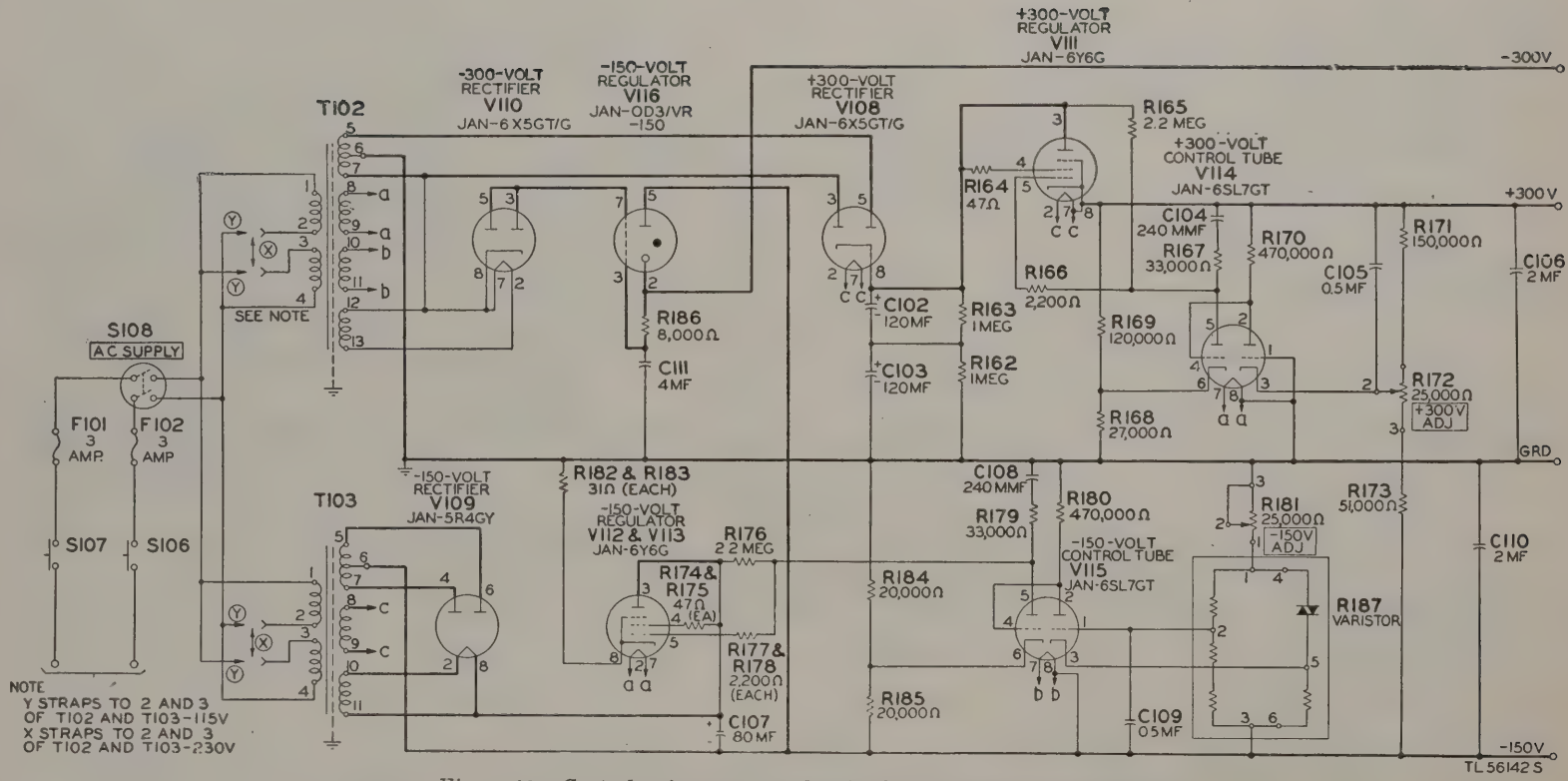

Figure 42. Control unit power supply, simplified schematic diagram.

received signals from the dual diversity converter will be connected directly through the sending circuit in the control unit to the frequency shift exciter (fig. 41) so that signals received at the radio receiving shelter will be retransmitted at the radio transmitter shelter.

93. Power Supply

a. GENERAL. The control unit is provided with its own power supply consisting of three regulated tube rectifier circuits. (See fig. 42.) The power supply requires an a-c power input of 115 volts at 50 to 60 cycles. It provides d-c outputs of —150 volts, +300 volts, and —300 volts. Each of these d-c supply arrangements is described separately in *b*, *c*, and *d* below.

b. —150-VOLT D-C SUPPLY. (1) *Rectification.* The two plates of rectifier tube V109 are connected so that one is positive during one half of the a-c supply cycle and the other is positive during the other half which provides full-wave rectification. Plate voltage is supplied from secondary windings 5–6 and 6–7 of transformer T103, and the filament supply is obtained from secondary winding 10–11 of transformer T103. Capacitor C107 filters the d-c output of the rectifier tube.

(2) *Regulation.* The output voltage is regulated by regulating the current and thus the voltage drop through tubes V112 and V113 which are connected in parallel with each other in series with the output. Changes in output voltage due to input voltage changes or load changes are reflected through double-triode amplifier tube V115 to the control grids of tubes V112 and V113, thereby controlling their negative grid bias. The grid bias in turn controls the voltage drop across the regulator tubes and either increases or decreases the voltage across them to return the output voltage to the correct regulated value. Resistor bridge (varistor) R187 is an unbalanced resistance bridge arrangement. Three legs of the bridge are conventional resistors. The fourth leg is a thyrite resistor whose resistance varies inversely as the impressed voltage. The bridge is connected in series with variable resistor R181 across the output. Thus the drop across the thyrite resistor varies in inverse proportion to variations in output voltage. The thyrite resistor has a negative temperature coefficient of resistance which means that its resistance varies inversely with temperature. To offset this and prevent false unbalance of the bridge, the leg diagonally opposite the thyrite resistor contains a nickel alloy resistor with a positive temperature cofficient of resistance. When the voltage across the —150-volt output terminals increases, either due to an increase in input voltage or a decrease in load, it results in an increase in negative voltage on cathode 3 of tube V115. The change in voltage on grid 1 of this tube is negligible when compared with the change on cathode 3. Consequently, the negative grid bias increases and reduces the associated plate circuit current and the drop across resistor R180 thereby increasing the voltage on control grid 4 of tube V115. Since the change in voltage on cathode 6 of tube V115 is negligible as compared with the change on grid 4, the negative grid bias will be reduced. This increases the associated plate circuit current, the voltage drop across resistor R176, and in turn the negative grid bias on tubes V112 and V115 just enough to reduce the —150-volt output to the regulated value. A decrease in voltage across the output terminals has the opposite effect.

(3) *Miscellaneous.* (*a*) Resistors R174 and R175 reduce the screen-grid current by maintaining the screen-grid voltage below the value of the plate voltage. Resistor R176 partially controls the grids of the series tubes to compensate for sudden changes in the a-c input voltage. Resistors R177 and R178 limit grid current in the event the grids of tubes V112 and V113 become positive. Resistor R179 and capacitor C108 prevent amplifier tube V115 from oscillating.

(*b*) Each series tube (V112 and V113) is self-biased by a cathode resistor (R183 and R182) whose function is to equalize and limit the current through each tube. The self-bias voltage thus obtained is added to the voltage drop from the regulator circuit to constitute the bias voltage for each series tube. Resistors R184 and R185 act as a voltage divider to furnish voltage for cathode 6 of tube V115. Capacitor C109 provides a low impedance to output ripple voltage. It increases the grid bias changes between control grid 1 and cathode 3 of V115 due to the ripple voltage in the output. These changes are amplified by tube V115 and applied to the control grids of tubes V112

and V113 to reduce ripple in the output to a small value. Capacitor C110 provides a low-impedance shunt to high-frequency voltages which may appear across the output.

c. +300-VOLT D-C SUPPLY. (1) *Rectification.* The two plates of rectifier tube V108 are connected so that one is positive during one half of the a-c supply cycle and the other is positive during the other half which provides full-wave rectification. Plate voltage is supplied from secondary windings 5–6 and 6–7 of transformer T102, and the filament supply is from secondary winding 8–9 of transformer T103. Capacitors C102 and C103 with resistors R163 and R162 filter the rectifier tube output.

(2) *Regulation.* (*a*) The output voltage is regulated by controlling the current and thus the voltage drop through the series tube V111. Changes in output voltage due to input voltage changes or load changes are reflected through double triode amplifier tube V114 to the control grid of tube V111, thereby controlling the negative grid bias on tube V111 and hence the voltage drop through it. This increase or decrease of voltage across tube V111 maintains the output voltage at its correct regulated value. Resistors R171 and R173 with variable resistor R172 form a potentiometer across the +300-volt and the regulated —150-volt outputs. The voltage at the variable tap on resistor R172 varies in proportion to the voltage variations across the potentiometer, and since the —150-volt output is regulated, it varies in proportion to the +300-volt output variations. This voltage is applied to cathode 3 of amplifier tube V114. Grid 1 of tube V114 is grounded and the tap on potentiometer R172 is adjusted to maintain cathode 3 a few volts positive with respect to the grounded grid to maintain a negative grid bias.

(*b*) When the voltage across the +300-volt output terminals increases, either due to an increase in input voltage or a decrease in load, it will result in a small increase in positive voltage on cathode 3 of tube V114. Since grid 1 of tube V114 is grounded, the negative bias will increase and reduce the associated plate current and the drop across resistor R170, thereby increasing the positive voltage on the control grid of tube V111. The change in voltage on cathode 6 of V114 is negligible compared with the change on grid 1 so the negative grid bias is reduced. This increases the associated plate circuit current, the voltage drop across resistor R165, and in turn the negative grid bias on tube V111 just enough to reduce the +300-volt output to the regulated value. A decrease in voltage across the output terminals has the opposite effect.

(3) *Miscellaneous.* (*a*) Resistor R164 reduces the screen-grid current by maintaining screen-grid voltage below the value of the plate voltage. Resistor R165 partially controls the grid of tube V111 to compensate for sudden changes in the a-c input voltage. Resistor R166 limits the grid current in the event that the grid becomes positive. Resistor R167 and capacitor C104 prevent tube V114 from oscillating. Resistors R168 and R169 act as a voltage divider to furnish the correct voltage on cathode 6 of tube V114.

(*b*) Capacitor C105 has a low-impedance to output ripple voltage. It is provided to increase grid bias changes between control grid 1 and cathode 3 of tube V114 due to ripple voltage in the output. These changes are amplified by tube V114 and applied to control grid 5 of tube V111 to reduce ripple in the output to a small value. Capacitor C106 provides a low-impedance shunt to high-frequency voltages which may appear across the output.

d. —300-VOLT D-C SUPPLY. (1) *Rectification.* Rectifier tube V110 is connected for half-wave rectification and conducts only on the negative half cycle of the voltage applied to the cathode. Filament voltage is supplied from winding 12–13 of transformer T102. Capacitor C111 filters the d-c output.

(2) *Regulation.* The output voltage is regulated by resistor R186 and voltage-regulator tube V116. Tube V116 is a gaseous regulator tube and will maintain a practically constant voltage of approximately 150 volts across it. Since it is connected in series with the regulated —150-volt output, the output voltage at pin 2 of tube V116 will be —300 volts and will be held within the regulating limits. To prevent the output voltage from becoming excessive in event that tube V116 is removed during operation, strap 7–3 in tube V116 is connected in series with the output. Capacitor C111 is connected after the strap so that it will be discharged by the load.

Section XV. TROUBLE SHOOTING

94. General Trouble-Shooting Information

Certain types of troubles in Radio Teletype Equipment AN/TRA–7 may be detected readily by checking the settings of controls and switches in the various units. Other conditions which are likely to cause trouble may be detected during the performance of the initial adjustments. In general, any important troubles which may occur probably will be reported as a result of service reactions or as a consequence of routine monitoring of the radio channels while checking the transmission. If trouble is reported during operation, make an immediate attempt to correct the condition. If the trouble cannot be found within a short time, remove the unit to a bench for a thorough check and substitute spare equipment in the working circuit.

Note. When interchanging chassis units, rear bumpers in cabinets may require adjustment to properly seat chassis.

a. TROUBLE-SHOOTING DATA. Take advantage of the material supplied in this manual. It will help in the rapid location of faults. Consult the following trouble-shooting data:

(1) Block diagrams of components.

(2) Complete schematic diagrams of components.

(3) Simplified and partial schematic diagrams. These diagrams are particularly useful in trouble shooting, because the repairman can follow the electrical functioning of the circuits more quickly than on the regular schematics, thus speeding trouble location.

(4) Voltage and resistance data for all socket connections.

(5) Illustrations of components. Front, top, and bottom views which aid in locating and identifying parts.

(6) Pin connections. Pin connections on sockets, plugs, and receptacles are numbered or lettered on the various diagrams.

(*a*) Seen from the bottom, pin connections are numbered in a *clockwise* direction around the sockets. On octal sockets, the first pin clockwise from the keyway is the No. 1 pin.

(*b*) Plugs and receptacles are numbered on the side to which the associated connector is attached. To avoid confusion, some individual pins are identified by letters appearing directly on the connector.

b. TROUBLE-SHOOTING STEPS. The first step in servicing a defective radio set is to sectionalize the fault. Sectionalization means tracing the fault to the component or *circuit* responsible for the abnormal operation of the set. The second step is to localize the fault. Localization means tracing the fault to the defective *part* responsible for the abnormal condition. Some faults such as burned-out resistors, r-f arcing, and shorted transformers can often be located by sight, smell, and hearing. The majority of faults, however, must be located by checking voltage and resistance, utilizing the charts. Paragraphs 95, 98, and 101 are trouble-shooting charts which list abnormal symptoms and their probable causes. These charts also give procedure for determining *which* of the probable locations of the fault is the exact one.

c. VOLTAGE MEASUREMENTS. Voltage measurements are an almost indispensable aid, for most troubles either *result* from abnormal voltages or *produce* abnormal voltages. Voltage measurements are taken easily, because they are always made between two points in a circuit. The circuit need not be interrupted.

(1) Unless otherwise specified, voltages listed on the voltage charts are measured between the indicated points and ground. These values are typical values and reasonable allowances should be made for variations in the resistances of the apparatus and measuring equipment.

(2) Always begin by setting the voltmeter on the *highest* range so that the voltmeter will not be overloaded. Then, if it is necessary to obtain increased accuracy, set the voltmeter to a lower range.

(3) When checking cathode voltage, remember that a reading can be obtained when the cathode resistor is actually open, as the resistance of the meter may act as a cathode resistor. Thus, the cathode voltage may be approximately normal only as long as the voltmeter is connected between cathode and ground. Before cathode voltage is measured, first make a resistance check with the power off to determine whether the cathode resistor is normal.

d. PRECAUTIONS AGAINST HIGH VOLTAGE. Certain precautions *must* be followed when

measuring voltages above a few hundred volts. High voltages are dangerous and can be fatal. When it is necessary to measure high voltages, observe the following rules:

(1) Connect the ground lead to the voltmeter.

(2) Place one hand in your pocket. This will eliminate the possibility of making accidental contact with another part of the circuit, thus causing the electricity to travel from one hand to the other through the body.

(3) If the voltage is less than 300 volts, connect the test lead to the hot terminal (which may be either positive or negative with respect to ground).

(4) If the voltage is greater than 300 volts, shut off the power, connect the hot lead, step away from the voltmeter, turn on the power, and note the reading on the voltmeter. Do not touch any part of the voltmeter, particularly when it is necessary to measure the voltage between two points which are above ground.

e. VOLTMETER LOADING. Voltmeter resistance must be at least 10 times as large as the resistance of the circuit across which the voltage is measured. If the voltmeter resistance is nearly equal to the circuit resistance, the voltmeter will indicate a voltage *lower* than the actual voltage present when the voltmeter is removed from the circuit.

(1) The resistance of a voltmeter on any range can be calculated by this simple rule: Resistance of the voltmeter equals its ohms-per-volt value multiplied by the full-scale range in volts. For example: The resistance of a 1,000-ohm-per-volt meter on the 300-volt range is 300,000 ohms (R equals 1,000 ohms per volt times 300 volts equals 300,000 ohms).

(2) To minimize voltmeter loading in high-resistance circuits, use the highest voltmeter range. Although only a small deflection will be obtained (possibly only 5 divisions on a 100-division scale), the electrical accuracy of the voltage measurement will be increased. The decreased loading of the voltmeter will more than compensate for the visual inaccuracy which results from reading only a small deflection on the voltmeter scale.

(3) Close observation of the meter when switching voltage ranges will show if the voltmeter is loading the circuit under test.

(*a*) *Extremely heavy loading* is indicated when the deflection of the pointer on the meter (not the voltage reading) is nearly the same for different ranges.

(*b*) *Appreciable loading* is indicated when the voltage readings (not the deflection) for different ranges do not agree.

(*c*) *Negligible loading* is indicated when the voltage readings (not the deflection) for different ranges do agree.

(4) The ohm-per-volt sensitivity of the voltmeter used to obtain the readings recorded on the voltage and resistance charts in this manual is printed on each chart. Use a meter having the same ohm-per-volt sensitivity. Otherwise it may be necessary to consider the effect of loading.

95. Frequency Shift Exciter, Trouble-Shooting Chart

Symptoms	Probable trouble	Correction
1. No output.	1. Defective power supply.	1. Check settings of −150V ADJ and +300V ADJ controls (par. 101).
	AC SUPPLY indicator lamp does not light.	Replace fuses F101, F102. Check switch S105.
	Lamp lights.	Replace tube V104.
	Voltages off	Replace tubes V105 and V106. Check resistors R112 to R117 and connections to T101.
	Relay K101 does not operate.	Check continuity of control leads between transmitter shelter and operating shelter and repair if necessary. Adjust relay if necessary
2. Oscillator fails to function correctly.	2. Tube V101, capacitors C101, C102, C103, C104, C132, coils L101, L102, and C105.	2. Check apparatus and replace defective equipment.

95. Frequency Shift Exciter, Trouble-Shooting Chart (contd.)

Symptoms	Probable trouble	Correction
3. Keying unsatisfactory.	3. Tube V103, capacitors C111, C113, and resistors R107, R108, and R111.	3. Replace V103; if trouble persists, check capacitors and resistors. Replace defective parts.
4. Insufficient output from keyer.	4. Tube V102, capacitors C105 to C110, coils L103 and L104, resistors R104, R105, and R106.	4. Replace V102. Check tuning capacitors C109 and C110. Check wiring and apparatus and replace defective equipment.
5. Mutilated signals.	5. Check waveform of the input signals. If input signals are of the correct voltage polarity and waveform.	5. Remove keyer to a bench and look for a defective tube or intermittent wiring trouble.

96. Voltage Measurements, Frequency Shift Exciter

To check the voltages in the frequency shift exciter, first remove all external connections to the exciter unit except the a-c power cord and coaxial cable assembly W101. Operate the TEST key to SPACE; TEST OSC switch to ON; and the AC SUPPLY switch to ON. Operate relay K101 by shorting pin C of LOCAL-CW CONTROL jack J106 to ground. All values given in the chart are positive d-c voltages, unless otherwise noted, measured from the indicated terminal to ground. Voltages indicated as H are 5.0 volts alternating current measured between the heater terminals. The voltages are based on use of a 1,000-ohm-per-volt meter.

Tube	Function	Socket terminals								Notes
		1	2	3	4	5	6	7	8	
V101	R-f osc	0	0	7.0	-------	7.0	168	6.2	215	
V102	Buffer amplr	0	0	295	150	-------	-------	6.2	5.0	Buffer tuned.
V102	Buffer amplr	0	0	295	210	-------	-------	6.2	10.0	Buffer detuned.
V103	Shift diode	0	1.6	0	6.2	0	-------	1.6	-------	
V104	Rectifier	-------	5H	-------	325	-------	325	-------	5H	
V105	Regulator	-------	110	-------	-------	220	-------	-------	-------	
V106	Regulator	-------	0	-------	-------	110	-------	-------	-------	
V107	Audio osc	0	0	0	-------	0	132	6.2	130	
V108	Mixer	0	0	275	90	-------	2.0	6.2	-------	
V109	Amplifier	0	0	1.5	-------	1.5	35.0	6.2	3.0	
V110	Indicator	0	4.0	-------	280	0	6.2	-------	-------	

97. Resistance Measurements, Frequency Shift Exciter

Tube	Pin number							
	1	2	3	4	5	6	7	8
V101	0	0	----------	51,000	----------	30,000	0	∞
V102	0	0	6,900	39,900	470,000	----------	0	∞
V103	∞	∞	0	0	∞	0	∞	----------
V104	----------	7,085	----------	80	----------	80	----------	7,085
V105	----------	∞	----------	----------	8,700	----------	----------	----------
V106	----------	----------	----------	----------	∞	----------	----------	----------
V107	0	0	0	30,000	0	21,900	0	22,100
V108	0	0	16,900	30,900	30,000	220	0	47,000
V109	0	0	820	470,000	820	276,900	0	276,900
V110	0	1.02 meg	100,000	18,900	0	0	----------	----------

Note. All resistance values are in ohms and all measurements are made to ground with all external cables disconnected. TEST key at NORM and TEST OSC key at 850 ∼.

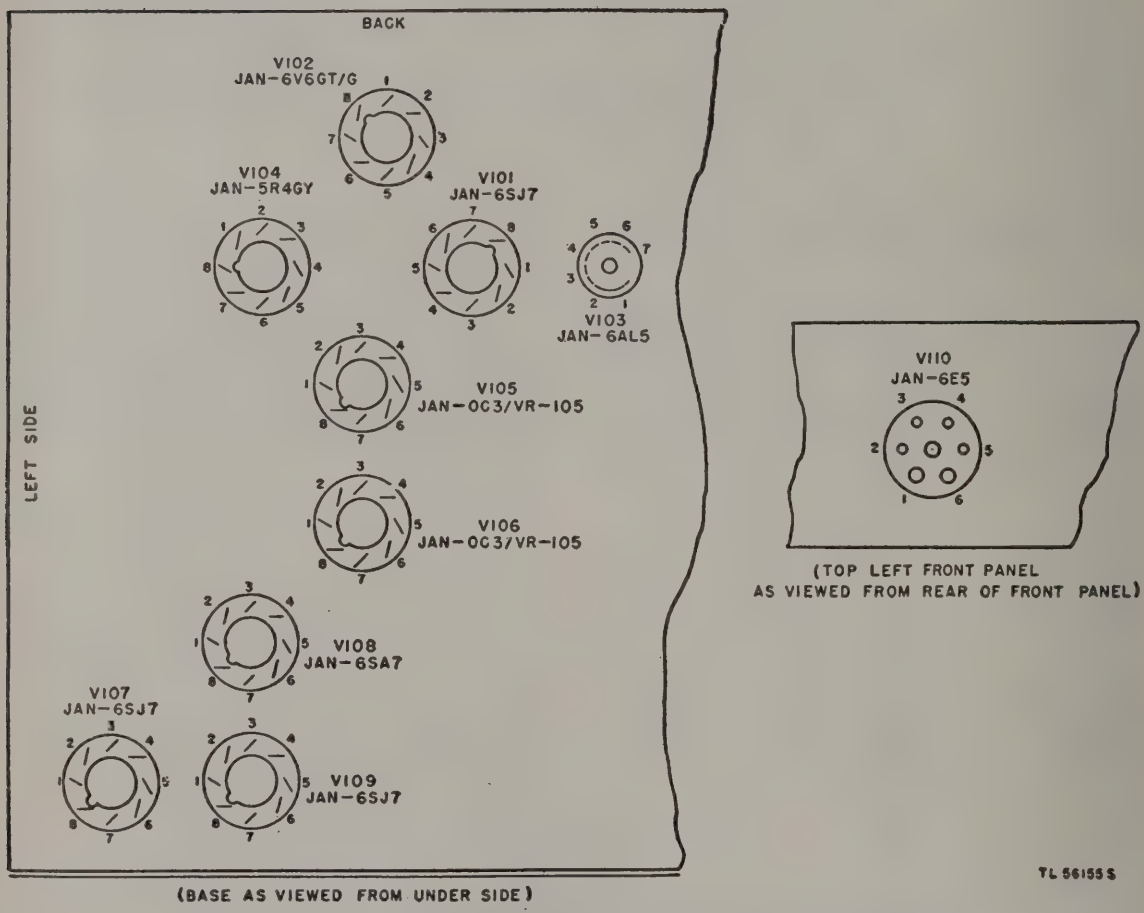

Figure 43. Frequency Shift Exciter O-39/TRA-7, location of tube sockets.

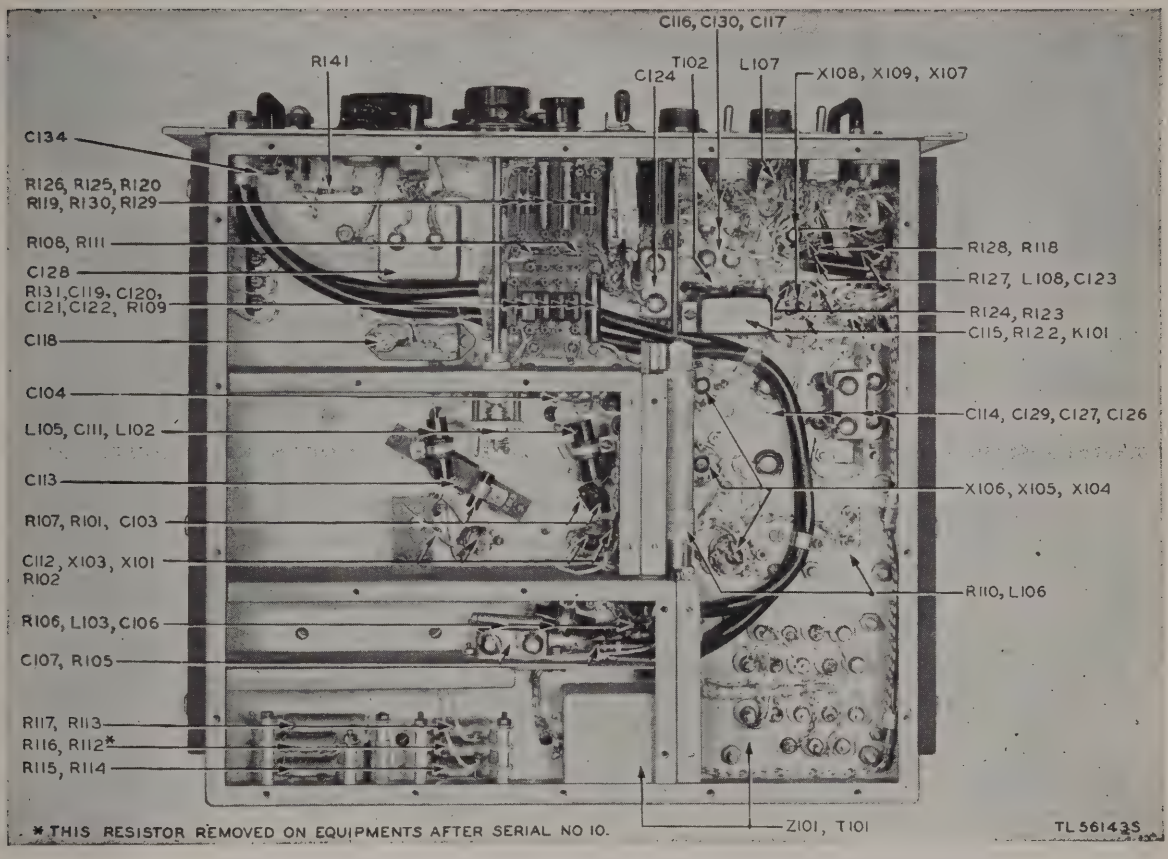

Figure 44. Frequency Shift Exciter O–39/TRA–7, bottom view of chassis.

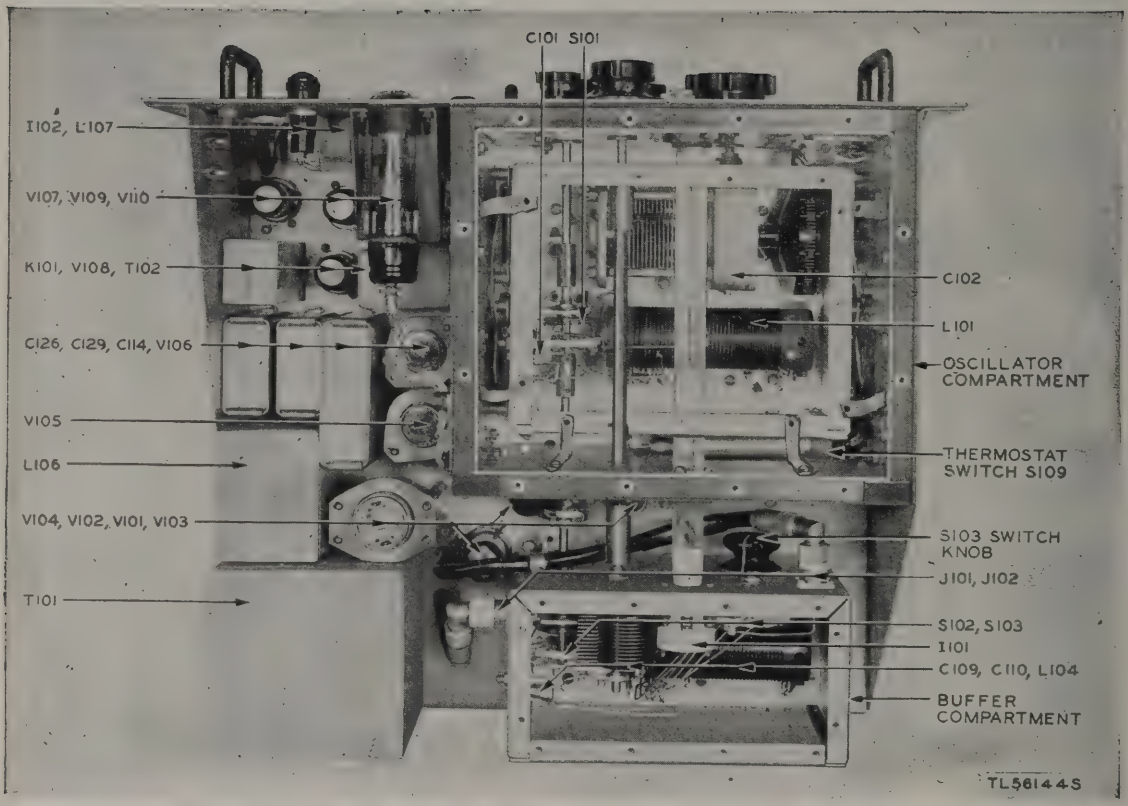

Figure 45. Frequency Shift Exciter O–39/TRA–7, top view of chassis with oven shield removed.

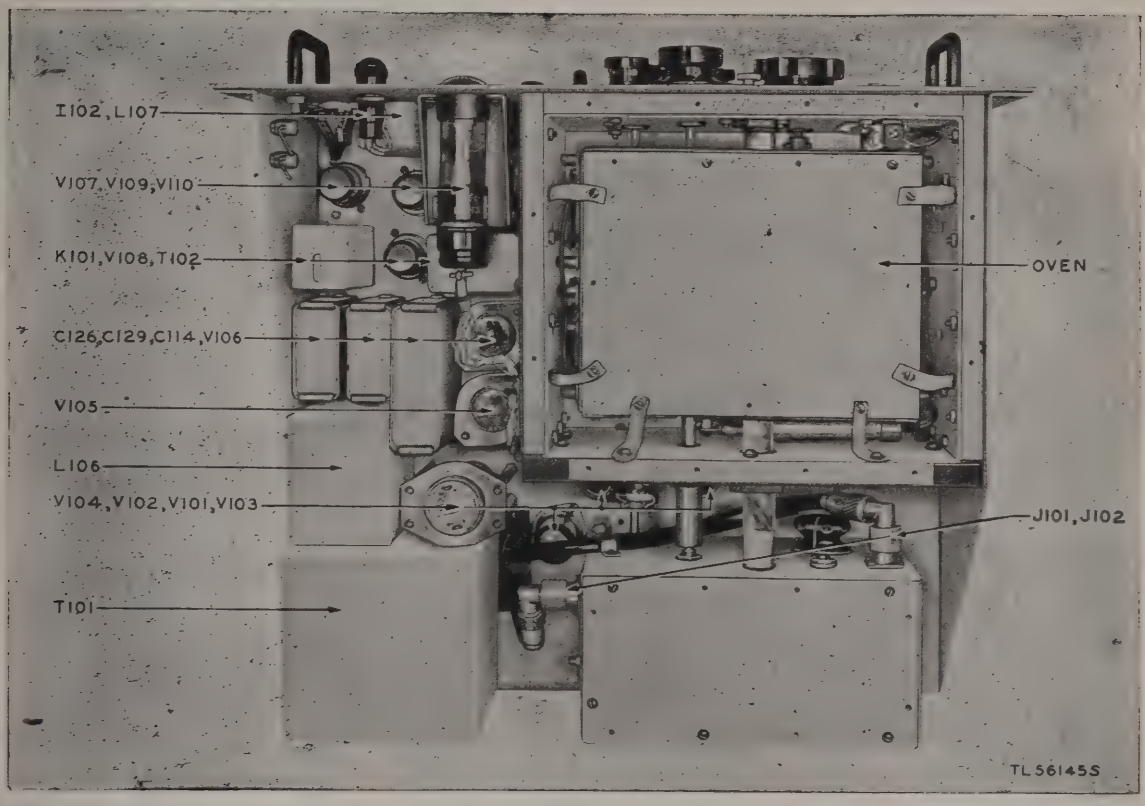

Figure 46. Frequency Shift Exciter O–39/TRA–7, top view of chassis with oven shield in place.

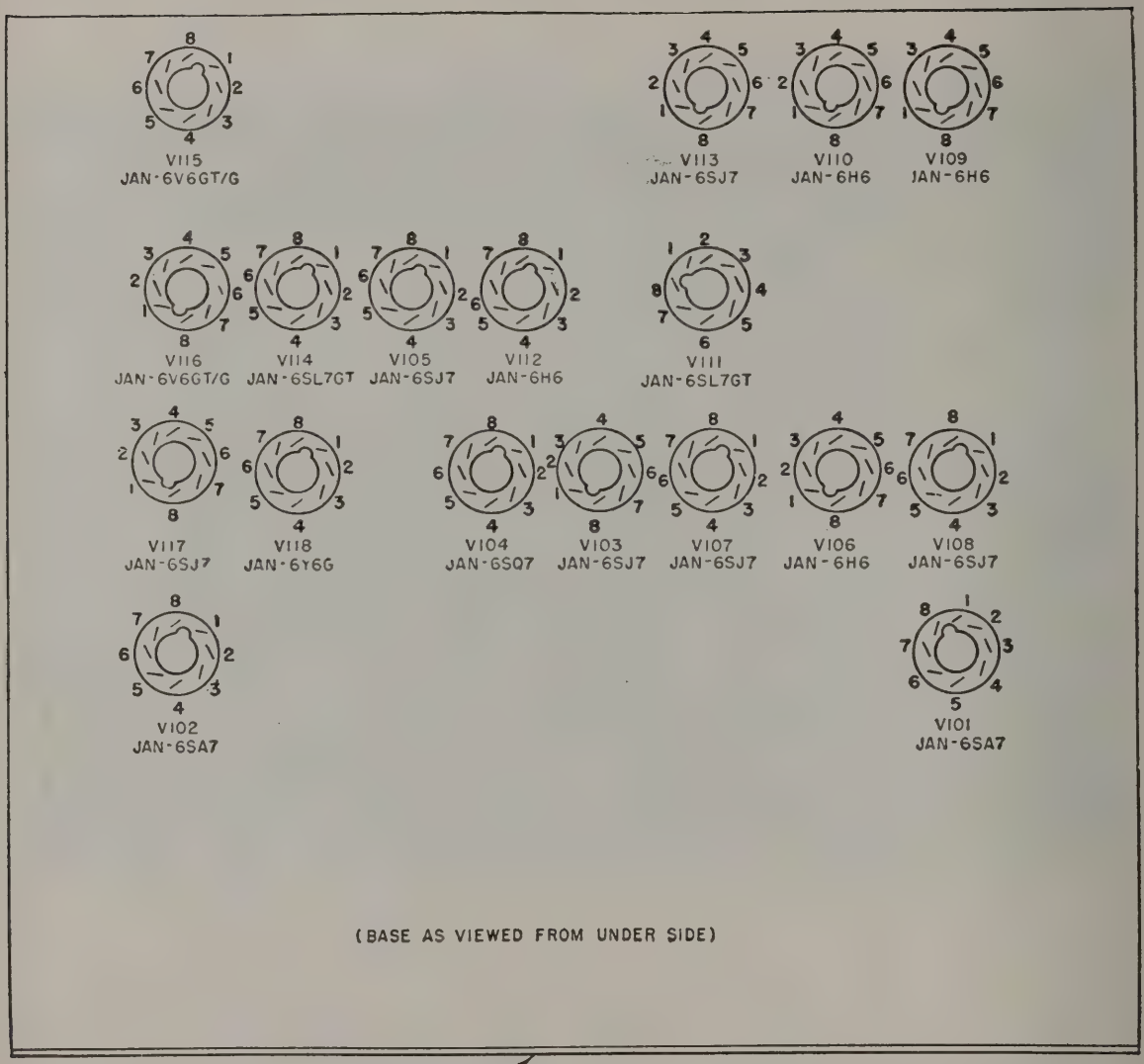

Figure 47. Dual Diversity Converter CV-31/TRA-7, location of tube sockets in basic unit.

98. Dual Diversity Converter, Trouble-Shooting Chart

Symptoms	Probable trouble	Corrections
1. White pilot fails to light when AC SUPPLY switch is turned to ON.	1. AC line, safety switches S301 and S302, transformer T302, fuses (F301 and F302), AC SUPPLY switch S303, receptacle J104, pilot lamp, filter Z110.	1. Check wiring and repair or replace defective apparatus.
2. Red pilot fails to light when PLATE switch is turned to ON.	2. Pilot lamp, transformer T301, plate switch S304.	2. Check wiring and repair or replace defective apparatus.
3. All voltages too high or too low, Meter B switched to +275V (+45 to +65) REG +150V (+20 to +40) REG −150V (−20 to −40) −150V (−20 to −40) −400V (−65 to −95).	3. Meter B. Tap connections on transformers T301 and T302.	3. Check and replace defective apparatus.
4. +275V not +45 to +65 on meter B.	4. T301 winding 5–6–7, choke L301, T302 winding 8–9, capacitors C301, C302, Tube V301.	4. Check and replace defective apparatus.
5. REG +150V not +20 to +40 on meter B.	5. Tubes V304 or V305, capacitors C307 or C308, T301 winding 11–12, T302 winding 5–7, resistors R308 to R321.	5. Check and replace defective apparatus.*
6. REG −150V indication not −20 to −40 on meter B.	6. Tubes V303 or V306, capacitors C305 or C306, T302 winding 12–13, resistors R301 to R306.	6. Check and replace defective apparatus.
7. −150V indication not −20 to −40 on meter B.	7. Tube V302, resistor R307, T301 winding 8–9–10, capacitors C303 or C304, choke L302, T302 winding 6–7.	7. Check and replace defective apparatus.
8. −400V indication not −65 to −95 on meter B.	8. Circuit wiring. V303, R301, R302, C305, C306, T302 (winding 12–13), T301 (winding 6–7).	8. Check continuity.
9. Meter B on INPUT fails to give an indication	9. Tubes V104 (section 3–4–5), V103, or V101 and V102, or associated circuit elements.	9. Check wiring and repair or replace defective apparatus.
10. Meter B switched to INPUT gives an indication, but no output is indicated on meter A or meter B when the latter meter is switched to CHAN B.	10. Limiter amplifier tubes V106, V107, V108 or the associated circuits.	10. Check circuits and apparatus and replace defective apparatus.
11. Meter A (or meter B on CHAN B) indicates an output while meter B (or meter A) indicates no output.	11. Tubes V101 (or V102) V109 (or V110), or the associated circuits. If meter A (or meter B on CHAN B) deflects only to the right or only to the left, one section of V109 (or V110) or one-half of Z109 (or Z110) may be the cause of the trouble.	11. Check circuits and apparatus and replace defective equipment.

* If tubes meet requirements, use voltmeter to measure voltage to ground from terminal 11 of terminal board T301. Voltage indicated should be −145 to −160. Measure voltage to ground from terminal 4. Voltage should be within ±3 volts of that measured from terminal 11 except that polarity is positive. If voltage at terminal 4 is too high, strap resistors R312 to R315 as required to obtain proper voltage. If voltage is too low, first strap out resistor R316 and then strap out resistors R312 to R315 as required to obtain proper voltage.

98. Dual Diversity Converter, Trouble-Shooting Chart (contd.)

Symptoms	Probable trouble	Corrections
12. Meter B on CHAN A + B fails to indicate a combined output while an output is obtained on meter A or meter B on CHAN B.		12. Check circuit and apparatus and replace defective equipment.
a. DRIFT COMPENSATOR turned off. *b.* DRIFT COMPENSATOR turned to ON after meter indication for *a* above is found to be satisfactory.	*a.* Tube V111 (section 1–2–3), OUTPUT switch S102, DRIFT COMPENSATOR switch S104, or associated circuits. *b.* Tube V104 (section 2–3–6) or other circuit elements associated with V104.	
13. Meter B on CHAN A + B deflects near zero on a steady mark and steady space (the drift compensator circuit fails to lock-in a mark or space).	13. Tubes V113, V114 (section 2–3), V111 (section 4–5–6), V112, OUTPUT switch S104, DRIFT COMPENSATOR switch S102, or associated circuit.	13. Check circuit and apparatus and replace defective equipment.
14. No output indication with meter B at POLAR or NEUTRAL, and no tone with OUTPUT switch at MARK.	14. Tubes V111 (section 1–2–3), V113, or associated circuit elements. (If meter B on CHAN A + B indicates an output from V111, the trouble may be with V113 or its associated circuit.)	14. Check circuit and apparatus and replace defective equipment.
15. Steady mark (d-c indication on meter B at POLAR and NEUTRAL, and steady tone) with OUTPUT switch at SPACE and an i-f input connected to J101 or J102.	15. Tube V105 or associated circuit elements.	15. Check circuit and apparatus and replace defective equipment.
16. D-c output (polar and neutral), but no tone output.	16. Oscillator unit (item 19), or tube V114 (section 4–5–6).	16. Check circuit and apparatus and replace defective equipment.
17. D-c neutral (or polar) output, but no polar (or neutral) output.	17. Tubes V115 and V116 (or V117 and V118) or associated circuit elements.	17. Check circuit and apparatus and replace defective equipment.
18. Imperfect polar output.	18. Neutral loop open.	18. Check that a monitoring teletypewriter is connected to the TTY RED and BLACK jacks or that the normally made contacts of these jacks are closed.
19. With tube V114 in its socket and OUTPUT switch operated alternately to MARK and SPACE, alternate tone on and tone off signals are not produced.	19. Tube V401 or associated circuit elements.	19. Check circuit and apparatus and replace defective equipment.

99. Voltage Measurements, Dual Diversity Converter

To check the voltages in the dual diversity converter, remove the input cables from the two radio receivers connected to receptacles J101 and J102. Operate the AC SUPPLY switch to ON, the PLATE switch to ON, the DRIFT COMPENSATOR switch to IN, and the OUTPUT switch to NORMAL or REVERSE. All other switches may be set at any of their designated positions. All values gives in the chart are positive d-c voltages unless otherwise noted, measured to ground. Voltages indicated by H are approximately 6.3 v a-c between heater terminals while those indicated by H′ are approximately 5.0 v a-c between heater terminals. The voltages are based on the use of a 1,000-ohm-per-volt meter, and scale settings approximately as follows:

Voltage measured (volts)	Scale used
Over 250	1,000-volt
50 to 250	250-volt
Under 50	50-volt

a. BASIC UNIT.

Tube	Function	Socket, terminals								Setting of controls
		1	2	3	4	5	6	7	8	
V101	Mixer (50 kc)	0	H	+270	+110	−8	0	H	0	
V102	Mixer (29.3 kc)	0	H	+270	+110	−8	0	H	0	
V103	Amplifier—limiter	0	H	+3.2	0	+3.2	+100	H	+20	
V104	Rectifier and amplifier.	0	−1	0	0	0	+110	H	H	Gain AMP at minimum resistance.
V105	Amplifier (carrier control).	0	H	0	0	0	+115	H	+10	
V106	Diode limiter	0	H	−4	0	−4	-------	H	0	
V107	Amplifier—limiter	0	H	0	0	0	+85	H	+50	
V108	Amplifier—limiter	0	H	+4	0	+4	+110	H	+280	
V109	Rectifier (discriminator).	0	H	0	0	0	-------	H	0	
V110	Rectifier (discriminator).	0	H	0	0	0	-------	H	0	
V111	Amplifier (driver and compensator.	+7.5	+90	+14	+4	+90	+17	H	H	OUTPUT switch at MARK } COMP. AMP set for ±70 on meter B*
		−7.5	+105	−9	−4.5	+110	−17			OUTPUT switch at SPACE }
V112	Rectifier (compensator).	0	H	+2	+20	−20	-------	H	+2	OUTPUT switch at MARK } LIMITER maximum resistance *
				−2	+20	−20	-------		−2	OUTPUT switch at SPACE }
V113	Driver	0	H	+10	+1.5	+10	+110	H	+20	OUTPUT switch at MARK } BIAS A normal setting*
				+5	−1.5	+5	140		+22	OUTPUT switch at SPACE }
V114	Amplifier (tone osc. and comp.).	−150	+80	−150	−150	0	−150	H	H	OUTPUT switch at MARK*
		−150	−90	−150	−150	−100	−150			OUTPUT switch at SPACE *
V115	Amplifier (polar signals).	0	H	+280	+130	+50		H	+50	OUTPUT switch at MARK } POLAR OUTPUT-MARK set to give +25 ma into 2,000-ohm load *
				+280	+120	−95	-------		−50	OUTPUT switch at SPACE }
V116	Amplifier (space signals).	0	H	+50	−40	−165		H	−150	OUTPUT switch at MARK } POLAR OUTPUT-SPACE set to give −25 ma into 2,000-ohm load
				−95	−75	−165	-------		−165	OUTPUT switch at SPACE }
V117	Amplifier (neutral signals).	0	H	−150	−165	−150	0	H	−160	OUTPUT switch at MARK *
				−165	−165	−165	−45		−140	OUTPUT switch at SPACE *
V118	Amplifier (neutral signals).	0	H	−66	−97	−150		H	−150	OUTPUT switch at } MARK POLOR OUTPUT set
				0	−72	−200	-------		−165	OUTPUT switch at } SPACE to give 60 ma (mark) in 1,080-ohm circuit

* Tube V105 removed from its sockets for these measurements.

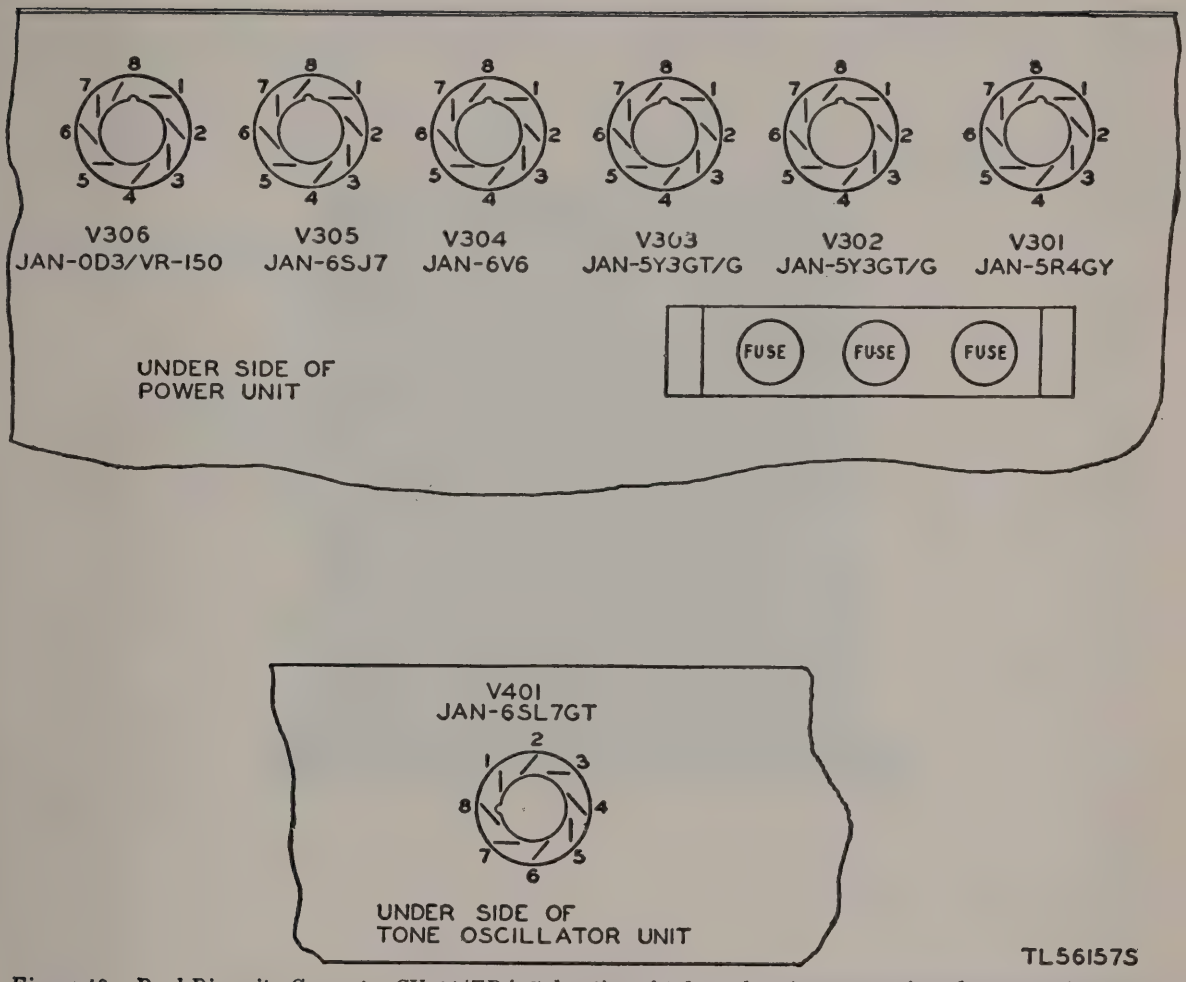

Figure 48. Dual Diversity Converter CV–31/TRA–7, location of tube sockets in power unit and tune oscillator unit.

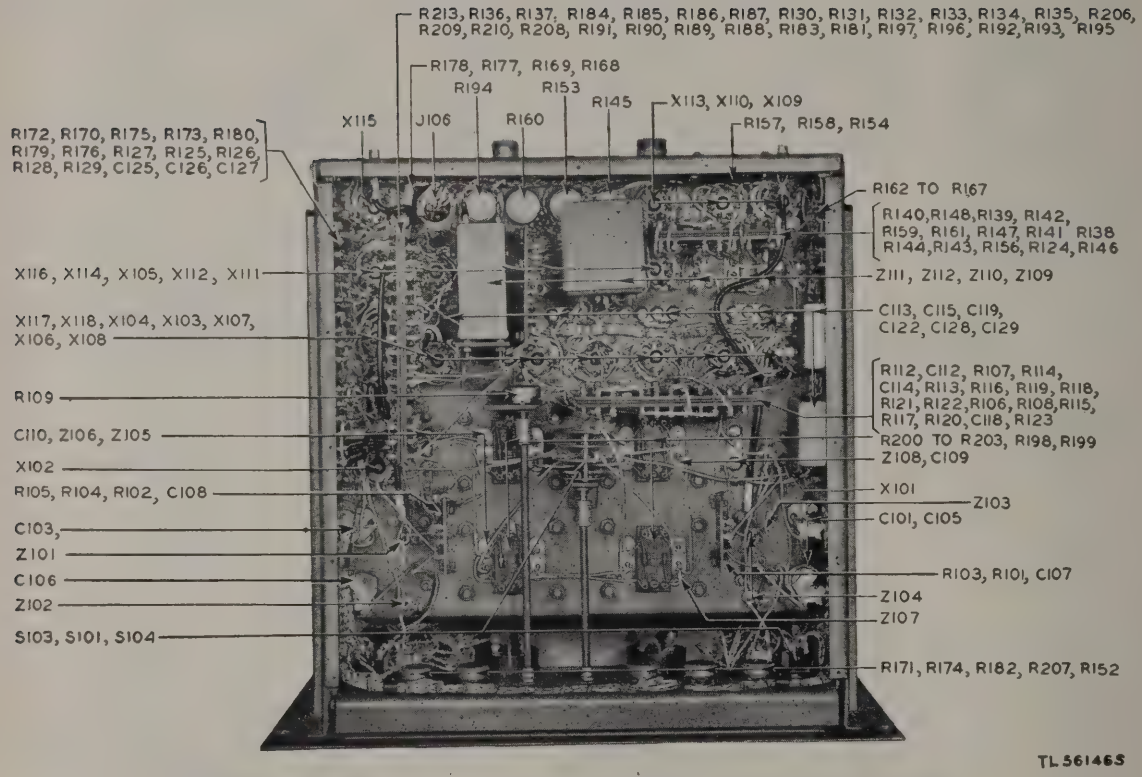

Figure 49. Dual Diversity Converter CV–31/TRA–7, bottom view of chassis.

b. Power Unit.

Tube	Function	Socket terminals[1]								Setting of controls
		1	2	3	4	5	6	7	8	
V301	Rectifier (+275v)	------	H′ +325	------	(380)	------	(380)	------	H′ +325	
V302	Rectifier (−150v)	------	H′	------	−185	------	−185	------	H′	
V303	Rectifier (−400 and −150v).	------	H′ 380[2]	------	−470	------	−470	------	H′ 380[2]	
V304	Variable impedance (+150v).	0	II	+300	+300	+135	------	II	+150	
V305	Regulator (+150v)	0	II	0	−7	0	+130	II	+135	
V306	Regulator (−150v)	------	−150	0	------	0	------	------	------	

[1] Tube V105 removed from its sockets for these measurements.
[2] A-c voltages.

c. Tone Oscillator.

Tube	Function	Socket terminals								Setting of controls
		1	2	3	4	5	6	7	8	
V401	Oscillator	−57	−22	−57	−57	−22	−57	0	0	

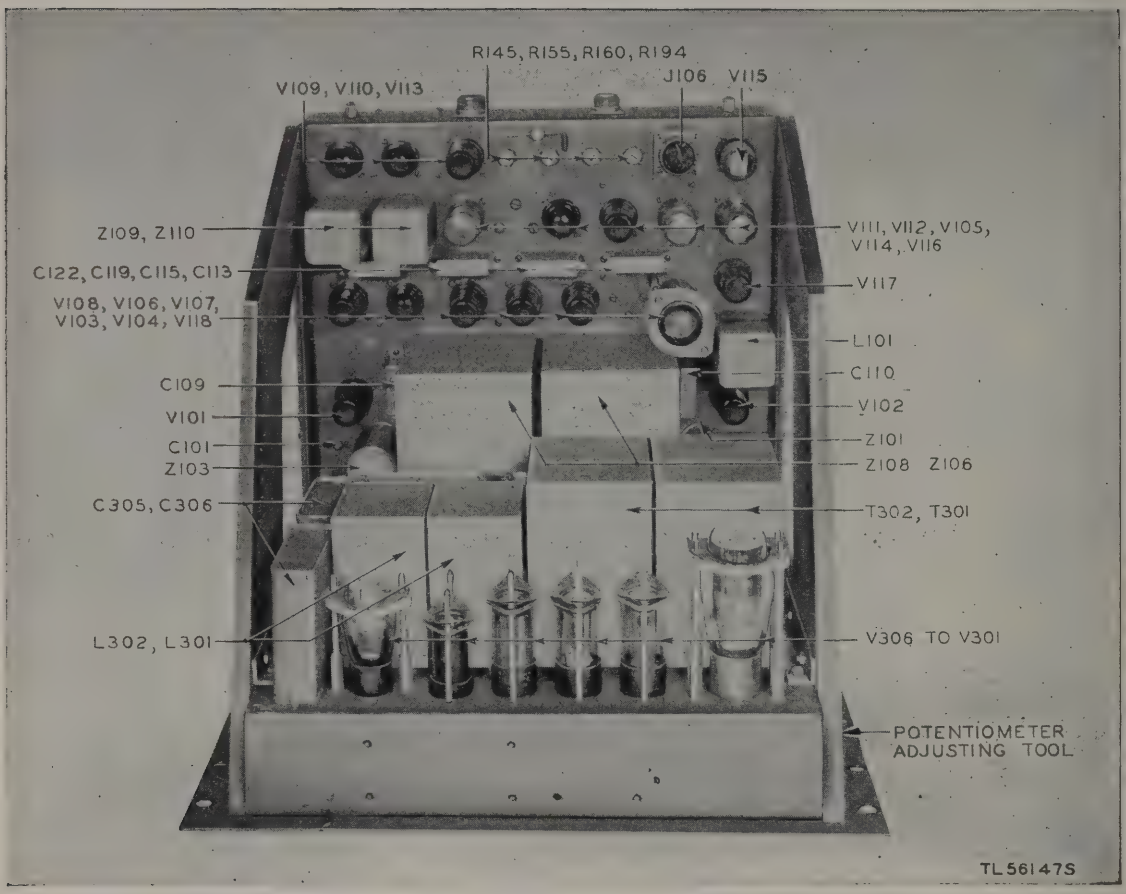

Figure 50. Dual Diversity Converter CV–31/TRA–7, top view of chassis with tone oscillator unit removed.

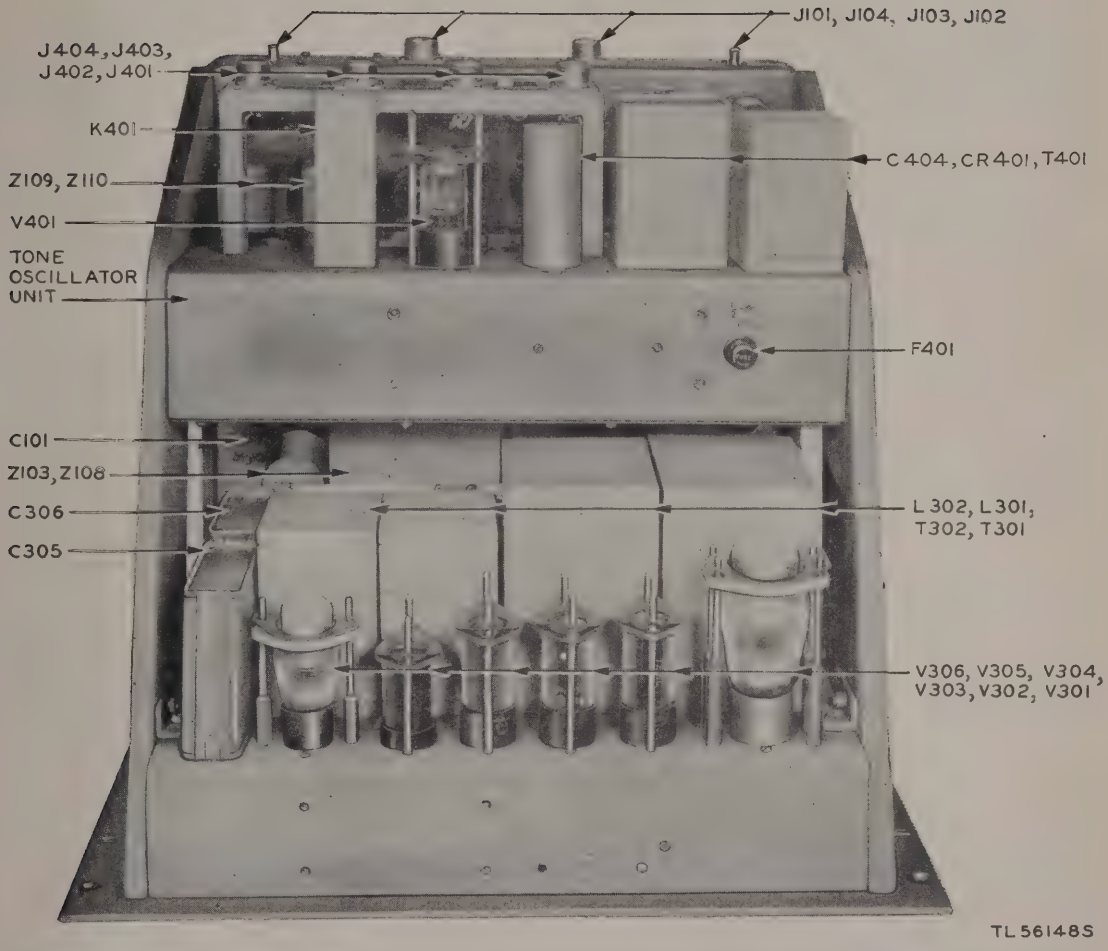

Figure 51. Dual Diversity Converter CV-13/TRA-7, top view of chassis with tone oscillator unit in place.

100. Resistance Measurements, Dual Diversity Converter

Tube	Pin number								Remarks
	1	2	3	4	5	6	7	8	
V101	0	0	12,000	12,500	24,000	0	0	0	Pin 4 to terminal 4 of E301 measures 4,700 ohms.
V102	0	0	12,000	12,500	22,500	0	0	0	Pin 4 to terminal 4 of E301 measures 4,700 ohms.
V103	0	0	1,000	470,000	1,000	56,000	0	110,000	
V104	0	2 meg	0	580,000	580,000	70,000	0	0	AMP GAIN control at maximum Pin 2 to ground measures 1,300 ohms with AMP GAIN control at minimum.
V105	0	0	0	1 meg	0	18,000	0	44,000	MARK HOLD LEVEL control at minimum, OUTPUT switch in NORMAL or REVERSE position.
V106	0	0	2,200	∞	2,200	0	0	∞	
V107	0	0	0	∞	0	60,000	0	115,000	
V108	0	0	1,000	∞	1,000	31,000	0	12,000	
V109	0	0	(*)	480,000	(*)	--------	0	(*)	5 ohms resistance between pins 3 and 5, 280,000 ohms resistance between pins 4 and 8. OUTPUT switch at NORMAL.
V110	0	0	(*)	(*)	(*)	--------	0	480,000	16 ohms resistance between pins 3 and 5, 480,000 ohms resistance between pins 4 and 8. OUTPUT switch at NORMAL.
V111	40,000	250,000	340,000	280,000	250,000	360,000	0	0	OUTPUT switch in MARK or SPACE position, COMP AMP control at maximum 470,000 ohms measured between pin 1 and terminal 4 of E301 (MARK) or between pin 1 and terminal 11 of E301 (SPACE).
V112	0	0	820,000	13,000	13,500	--------	0	820,000	LIMITER control in midposition. Pin 4 to terminals 4 of E301 measures 1,700 ohms, and pin 5 to terminal 11 of E301 measures 2,500 ohms.
V113	0	0	2,000	620,000	2,000	18,000	0	44,000	BIAS A control at maximum. Pin 8 to terminal 12 of E301 measures 70,000 ohms.
V114	660,000	173,000	19,000	660,000	120,000	19,000	∞	∞	BIAS B and COMP AMP controls at maximum. Pins 1 and 4 to terminal 12 of E301 measures 62,000 ohms (BIAS B at min). Pin 2 to terminal 4 of E301 measures 18,500 ohms (COMP BAL at min). Pin 2 to terminal 11 of E301 measures 200,000 ohms.
V115	0	0	10,000	27,000	1,700	--------	0	∞	POLAR OUTPUT, MARK control at maximum.
V116	0	∞	1,700	16,000	200,000	--------	∞	15,000	POLAR OUTPUT, SPACE control at maximum.

100. Resistance Measurements, Dual Diversity Converter (contd.)

Tube	Pin number								Remarks
	1	2	3	4	5	6	7	8	
V117	0	∞	15,000	200,000	15,000	10,500	∞	63,000	
V118	0	∞	19,000	136,000	———	———	∞	15,000	NEUTRAL OUTPUT control at maximum. Pin 4 to terminal 13 of E301 measures 10,000 ohms (NEUTRAL OUTPUT at min). Pin 5 to terminal 12 of E301 measures 140,000 ohms.
V301	0	10,000	———	0	———	0	———	10,000	
V302	———	0	———	16,000	———	———	———	0	
V303	———	0	———	33,000	———	33,000	———	0	Pins 4 and 6 to terminal 12 of E301 measure 2,420 ohms.
V304	0	8,000	10,000	10,000	110,000	———	8,000	8,000	
V305	0	0	0	36,000	0	13,000	0	110,000	
V401	28,000	110,000	1,000	28,000	110,000	1,000	0	0	

* Refer to remarks column.

Note. All resistance values are in ohms and all measurements are made to ground, unless otherwise noted, with all cables disconnected.

Resistance measurements to ground from terminals of E301 are as follows:

E301 terminals	3 (+275)	4 (+150 Reg)	11 (—150 Reg)	12 (—400)	13 (—150)	14 (ground)
Resistance (ohms)	10,000	8,000	19,000	———	15,000	0

101. Control Unit, Trouble-Shooting Chart

a. FULL-DUPLEX OPERATION. When using trouble-shooting chart below, turn the SERVICE switch to FULL DX, the OPERATION switch to NORMAL, and throw the TRANSMITTER switch to ON.

Symptom	Probable trouble	Corrections
1. Unequal meter deflections, METER knob on BALANCE.	1. Feedback voltages unequal.	1. Check plate voltage of tube V103 and d-c voltage at junction of resistors R106 and R107. Replace defective apparatus.
	Faulty diode V102.	Replace tube V102.
	Faulty capacitor C101.	Replace capacitor C101.
2. No meter indication with METER knob on REC EXT CURRENT.	2. No positive voltage on grid of tube V104.	2. Check plate voltage of tube V101 and grid to cathode voltage on tube V104. Replace defective apparatus.
	Defective tube V104.	Replace tube V104.
	Open plate circuit of tube V104.	Check continuity through SERVICE and OPERATION switches and resistors R130 and R131 from pin 3 of tube V104. Replace defective apparatus or restore continuity of circuit.
3. No control when turning EXTENSION CURRENT knob.	3. Incorrect screen voltage on tube V104.	3. Check resistors R108 to R111 and replace defective apparatus.

101. Control Unit, Trouble-Shooting Chart—Continued.

Symptom	Probable trouble	Corrections
4. No meter indication with METER knob on SEND EXT CURRENT.	4. Open resistor in voltage divider.	4. Check continuity of resistors R132, R133, and R134. Replace defective apparatus or restore continuity of circuit.
5. No meter indication with METER knob on SEND LINE CURRENT and mark signal being transmitted.	5. Send line not terminated.	5. Short-circuit binding posts marked LINE connecting to the radio transmitter shelter. If the METER then indicates marking current, the trouble is in the line to the radio transmitter shelter. If there is still no indication, then check the continuity through the shelter wiring to ground and pin 8 of tube V105.
	Defective tube V105.	Replace tube V105.
	No plate voltage on tube V105.	Check continuity of leads to plate of tube V105.
6. No control when turning SEND LINE CURRENT MARK knob.	6. Incorrect screen voltage on tube V105.	6. Check resistors R145, R146, and R147. Replace defective apparatus.
	Incorrect plate voltage on tube V106.	Check plate voltage on tube V106 and resistor R144. Replace defective apparatus.
7. No meter indication with METER knob on SEND LINE CURRENT and space signal being transmitted.	7. Plate resistor R144 open.	7. Replace defective apparatus.
	No plate voltage on tube V106.	Replace tube V106.
	No grid voltage on tube V106.	Check plate voltage of tube V107 and replace tube V107 if defective.
8. No control when turning SEND LINE CURRENT SPACE knob.	8. Incorrect screen voltage on tube V106.	8. Replace resistors R142 and R143 if defective.
9. No meter indication with METER knob on REC LINE CURRENT.	9. Receive line not terminated.	9. Check continuity of binding posts marked LINE to receiving shelter terminals 1–2 of coil T101.
10. Unequal deflections when testing on mark and space signals from the receiving shelter.	10. Incorrect adjustment at receiving shelter.	10. Communicate with operator at receiving shelter to adjust polar send currents.
11. Frequent errors when sending with Teletypewriter TG–7A.	11. Orientation setting on Teletypewriter TG–7A incorrect.	11. Set orientation indicator at the middle of the range of the typing unit.
12. Frequent errors when receiving with Teletypewriter TG–7A.	12. Unsatisfactory radio transmission.	12. Check monitoring copy at receiving shelter and attempt to improve quality of radio reception.

b. HALF-DUPLEX OPERATION. When using trouble-shooting chart below, turn the SERVICE switch to HALF DX, the OPERATION switch to NORMAL, and throw the TRANSMITTER switch to ON.

Symptom	Probable trouble	Corrections
1. Unequal meter deflections, METER knob on BALANCE.	1. Feedback voltages unequal.	1. Check plate voltage of tube V103 and d-c voltage at junction of resistors R106 and R107. Replace defective apparatus.
	Faulty diode tube V102.	Replace tube V102.
	Faulty capacitor C101.	Replace capacitor C101.

101. Control Unit, Trouble-Shooting Chart—Continued.

Symptom	Probable trouble	Corrections
2. No meter indication with METER knob on SEND EXT CURRENT.	2. No positive grid voltage on tube V104.	2. Check plate voltage of tube V101 and grid and cathode voltage of tube V104.
		Replace defective apparatus.
	Defective tube V104.	Replace tube V104.
	Open plate circuit of tube V104.	Check continuity through SERVICE and OPERATION switches and resistors R130 and R161. Replace defective apparatus or restore continuity of circuits.
3. No control when turning EXTENSION CURRENT knob.	3. Incorrect screen voltage on tube V104.	3. Check resistors R108 to R111. Replace defective apparatus.
4. No meter indication with METER knob on SEND LINE CURRENT and mark signal being transmitted.	4. Send line not terminated.	4. Short-circuit binding posts marked LINE, connecting to the radio transmitter shelter. If the METER then indicates marking current, the trouble is in the line to radio transmitter shelter. If there is still no indication, check the continuity through the shelter wiring to ground and pin 8 of tube V105.
	Defective tube V105.	Replace tube V105.
	No plate voltage on tube V105.	Check continuity of leads to plate of tube V105.
5. No control when turning SEND LINE CURRENT, MARK knob.	5. Incorrect screen voltage on tube V105.	5. Check resistors R145, R146, and R147. Replace defective apparatus.
	Incorrect plate voltage on tube V106.	Check plate voltage of tube V106, and resistor R144.
6. No meter indication with METER knob on SEND LINE CURRENT and space signal being transmitted.	6. Plate resistor R144 open.	6. Replace defective apparatus.
	No grid voltage on tube V106.	Check plate voltage on V107 and replace tube V107 if defective.
7. No control when sending SEND LINE CURRENT, SPACE knob.	7. Incorrect screen voltage on tube V106.	7. Replace resistors R142 and R143 if defective.
8. No meter indication with METER knob on REC LINE CURRENT.	8. Receive line not terminated.	8. Check continuity of binding posts marked LINE to terminals 1–2 of coil T101.
9. Unequal deflection when testing on mark and space signals from the receiving shelter.	9. Incorrect adjustment at receiving shelter.	9. Communicate with operator at receiving shelter to adjust polar send currents.
10. Frequent errors when sending copy with Teletypewriter TG–7A.	10. Orientation setting on Teletypewriter TG–7A incorrect.	10. Set orientation indicator at the middle of the range of the typing unit.
11. Frequent errors when receiving copy on Teletypewriter TG–7A.	11. Unsatisfactory radio transmission.	11. Check monitoring copy at receiving shelter and attempt to improve quality of radio reception.

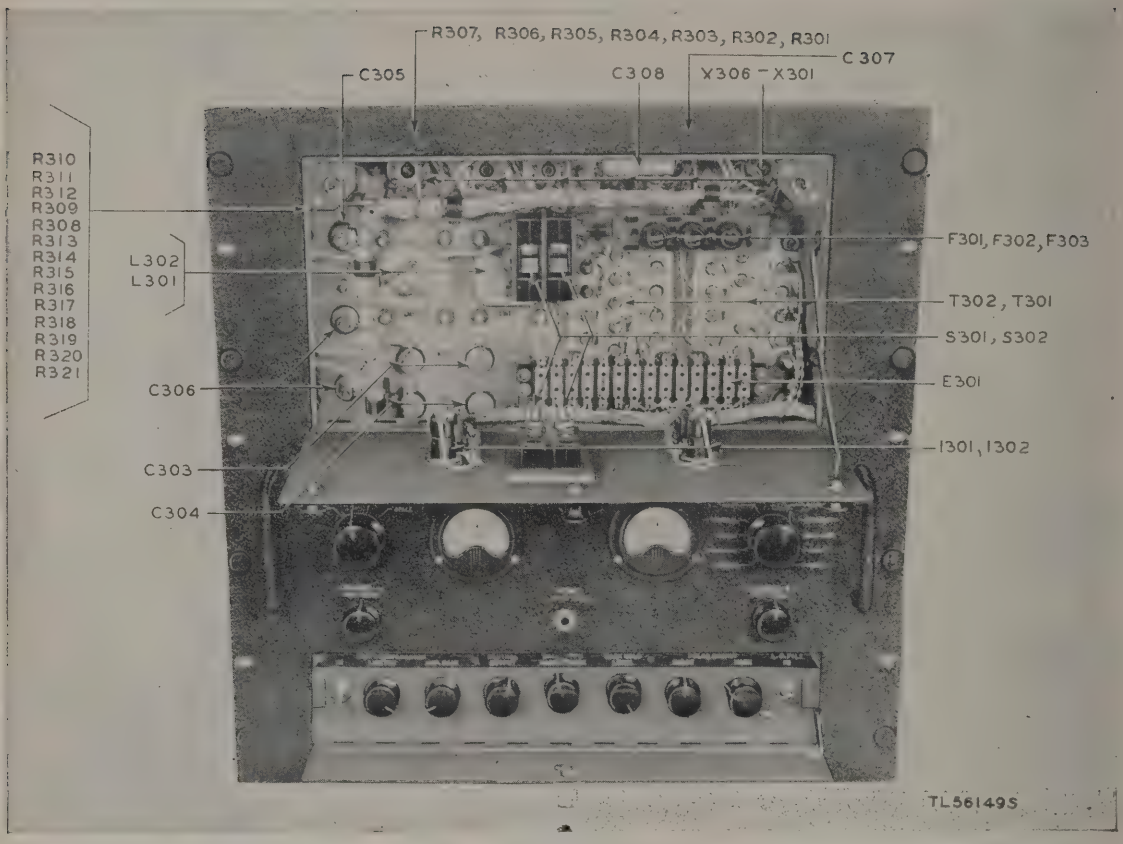

Figure 52. Dual Diversity Converter CV-31/TRA-7, front view of chassis with hinged panels lowered.

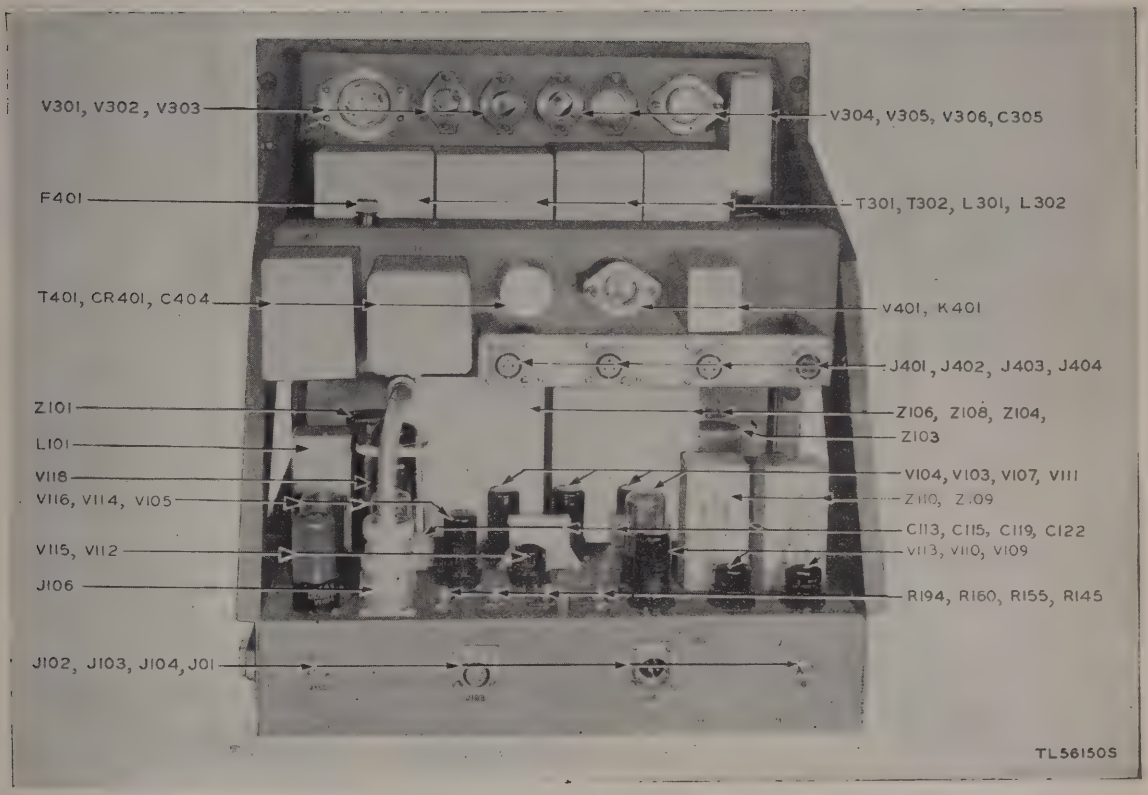

Figure 53. Dual Diversity Converter CV–31/TRA–7, rear view of chassis showing connectors.

c. ONE-WAY OPERATION, TRANSMITTING. When using trouble-shooting chart below, turn the SERVICE switch to ONE WAY, the OPERATION switch to NORMAL, and throw the TRANSMITTER switch to ON.

Symptom	Probable trouble	Corrections
1. No meter indication with METER knob on SEND EXT CURRENT.	1. No positive grid voltage on tube V104. Defective tube V104. Open plate circuit of tube V104.	1. Check plate voltage of tube V101 and replace defective apparatus. Replace tube V104. Check continuity through SERVICE and OPERATION switches and resistors R130 and R161. Restore circuit continuity or replace defective apparatus.
2. No control when turning EXTENSION CURRENT knob.	2. Incorrect screen voltage on tube V104.	2. Check resistors R108 to R111 and replace defective apparatus.
3. No meter indication with METER knob on SEND LINE CURRENT and mark signal being transmitted	3. Send line not terminated. Defective tube V105. No plate voltage on tube V105.	3. Short-circuit binding posts marked LINE to transmitter shelter. If the METER then indicates marking current, the trouble is in the line to the radio transmitter shelter. If there is still no indication, then check the continuity through the shelter wiring to ground and pin 8 of tube V105. Replace tube V105. Check continuity of leads to plate of tube V105.
4. No control when turning SEND LINE CURRENT, MARK knob.	4. Incorrect screen voltage on tube V105. Incorrect plate voltage on tube V106.	4. Check resistors R145, R146, and R147. Replace defective apparatus. Check resistor R144 and replace if defective.
5. No meter indication with METER knob on SEND LINE CURRENT and space signal being transmitted.	5. Plate resistor R144 open. No grid voltage on tube V106.	5. Check resistor R144 and plate voltage of tube V106. Replace defective apparatus. Check plate voltage of tube V107 and replace tube V107 if defective.
6. No control when turning SEND LINE CURRENT, SPACE knob.	6. Incorrect screen voltage on tube V106.	6. Replace resistors R142 and R143 if defective.
7. Frequent errors when sending copy on Teletypewriter TG–7A.	7. Orientation setting on Teletypewriter TG–7A incorrect.	7. Set orientation indicator at the middle of the range of the typing unit.

d. ONE-WAY OPERATION, RECEIVING. When using trouble-shooting chart below, turn the SERVICE switch to ONE WAY, the OPERATION switch to NORMAL, and throw the TRANSMITTER switch off (down).

Symptom	Probable trouble	Corrections
1. Unequal meter deflections, METER knob on BALANCE.	1. Feedback voltages unequal. Faulty diode tube V102. Faulty capacitor C101.	1. Check plate voltage of tube V103 and d-c voltage at junction of resistors R106 and R107. Replace tube V102. Replace capacitor C101.

Symptom	Probable trouble	Corrections
2. No meter indication with METER knob on SEND EXT CURRENT.	2. No positive grid voltage on tube V104.	2. Check plate voltage of tube V101 and grid and cathode voltage of tube V104. Replace defective apparatus.
	Defective tube V104.	Replace tube V104.
	Open plate circuit of tube V104.	Check continuity through SERVICE and OPERATION switches and resistors R130 and R161. Replace defective apparatus or restore continuity of circuit.
3. No control when turning EXTENSION knob.	3. Incorrect screen voltage on tube V104.	3. Check resistors R108 to R111 and replace defective apparatus.
4. Frequent errors when receiving copy on Teletypewriter TG–7A.	4. Orientation setting on Teletypewriter TG–7A incorrect.	4. Set orientation indicator at the middle of the range of the typing unit.
	Unsatisfactory radio transmission.	Check monitoring copy at receiving shelter and attempt to improve quality of radio reception.

e. Power Supply Unit. When using trouble-shooting chart below, turn the SERVICE switch to FULL DUPLEX, the OPERATION switch to NORMAL, and throw the TRANSMITTER switch to ON.

Symptom	Probable trouble	Corrections
1. Unable to obtain —150 volts with maximum clockwise rotation of the —150 V ADJ rheostat (R181).	1. Defective tubes.	1. Check tubes in the order listed: V115, V109, V112, and V113. Replace defective tube.
	Faulty capacitor	Check capacitors C107, C109, and C110 for break down and replace faulty capacitor. Check proper connection to capacitor C107 to insure proper poling.
	Thyrite unit unbalanced.	Replace resistor R187.
2. Unable to obtain +300 volts with maximum clockwise rotation of the +300 V ADJ potentiometer R172.	2. Defective tubes.	2. Check tubes in the following order: V114, V108, and V111. Replace defective tube.
	Faulty capacitor	Check capacitors C102, C103, C105, and C106 for break down and replace defective capacitor. Insure that connections to capacitors C102 and C103 provide proper poling.
3. Unable to obtain —300 volts.	3. Defective tube.	3. Check tubes in order: V116 and V110. Replace defective tube.
	Faulty capacitor.	Replace capacitor C111.

102. Voltage Measurements, Control Unit

To check the voltages in the control unit, first operate the AC SUPPLY switch to ON, the SERVICE switch to FULL DX, the OPERATION switch to NORMAL, and throw the TRANSMITTER switch to ON. All voltage values given in the chart are positive d-c voltages measured to ground unless otherwise noted. All d-c measurements were made with a 20,000-ohm-per-volt meter. Voltages indicated by H are 6.3 volts a-c measured between the heater terminals. Voltages indicated by H′ are 5 volts ac measured between heater terminals.

a. BASIC UNIT.

Tube	Signal	Pin number							
		1	2	3	4	5	6	7	8
V101	Mark	0	H	+2.8 *		+2.8 *	0	H	+19.0
	Space	0	H	+14.5 *		+14.5 *	+50.0	H	−132.0
V102	Mark	0	H		+15 *	−15 *		H	
	Space	0	H		+15 *	−15 *		H	
V103	Mark	0	H	−150	0 *	−150	−57	H	−142
	Space	0	H	−150	−25 *	−150	0	H	+28 to 55
V104	Mark	0	H	−62	−102	−1.0 *		H	−150
	Space	0	H	0	−82	−55 *		H	−150
V105	Mark	0	H	+300	+85	+1.0		H	+6.0
	Space	0	H	+300	+102	−46.5		H	−6.0
V106	Mark	0	H	+1.0	−57	−65 *		H	−150
	Space	0	H	−47	−77	+0.9 *		H	−150
V107	Mark	0	H	−150	0 *	−150	+60	H	−141
	Space	0	H	−150	+22 *	−150	0	H	+43
Junction point of R106–R107				Mark −21.5 *				Space +21.5 *	
Junction point of R133–R134				Mark −42				Space −130	

* Measurements made with respect to −150 volts.

b. RECTIFIER UNIT.

Tube	Pin number							
	1	2	3	4	5	6	7	8
V108		H	350 ac		350 ac		H	+440
V109		H′		275 [1] ac		275 [1] ac		H′
V110		H	−450		−450		H	350 ac
V111		H	+440	+440	+280		H	+300
V112		H	+165	+150	−15		H	+2.3
V113		H	+165	+160	−15		H	+2.3
V114	0	+20	+0.7	+20	+280	+57	H	H
V115	−116	−80	−112	−80	−13	−73	H	H
V116		−300	−450		−150		−450	

Varistor	Terminal number					
	1	2	3	4	5	6
R187	−25 [2]	−117 [2]	−150	−25 [2]	−115 [2]	−150

Junction point	R174–R175	R179–R178	R164–R165	R168–R169
Voltage	+165	−14	+430	+55

[1] Measurements made with respect to −150 volts.
[2] These values may vary considerably with different varistor units.

103. Resistance Measurements, Control Unit

Tube	Pin number							
	1	2	3	4	5	6	7	8
V101	0	2,000	3,000	3 meg	3,000	10,000	2,000	100,000
V102	0	0	800,000	21,000	21,000		0	800,000
V103	0	2,000	2,000	1 meg	1,900	10,000	2,000	80,000
V104	0	2,000	1,200	11,500	92,000		2,000	2,000
V105	0	40,000	16,000	4,000			0	2,000
V106	0	2,000	3,500	5,000	100,000		2,000	2,000
V107	0	2,000	2,000	800,000	2,000	10,000	2,000	100,000
V108		40,000	190		185		40,000	300,000 *
V109		500,000		2,000		2,000		400,000 *
V110		200	75,000		75,000		200	200
V111		38,000	400,000 *	400,000 *	5 meg		40,000	40,000
V112		0	300,000 *	300,000 *	3.3 meg		0	30
V113		0	350,000 *	350,000 *	5 meg		0	30
V114	0	600,000	50,000	600,000	250,000	25,000	0	0
V115	20,000	500,000	56,000	500,000	2.5 meg	11,000	2,000	2,000
V116		60,000	70,000		2,000		75,000	

* Allow 1 minute for capacity charge.

Note. All resistance values are in ohms and all measurements are made to ground with all external cables disconnected. SERVICE switch at FULL DX, OPERATION switch at NORMAL, TRANSMITTER switch at ON, and AC SUPPLY switch turned off.

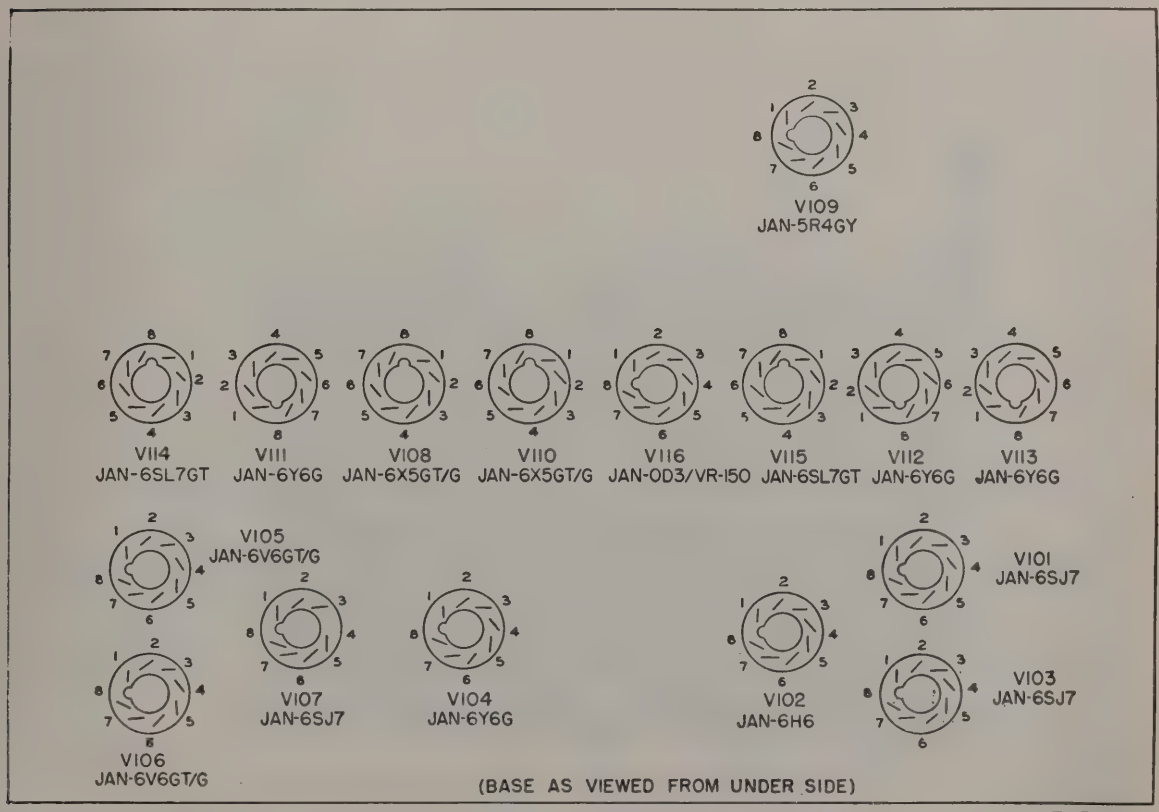

TL56158S

Figure 54. Control Unit C–292/TRA–7, location of tube socket.

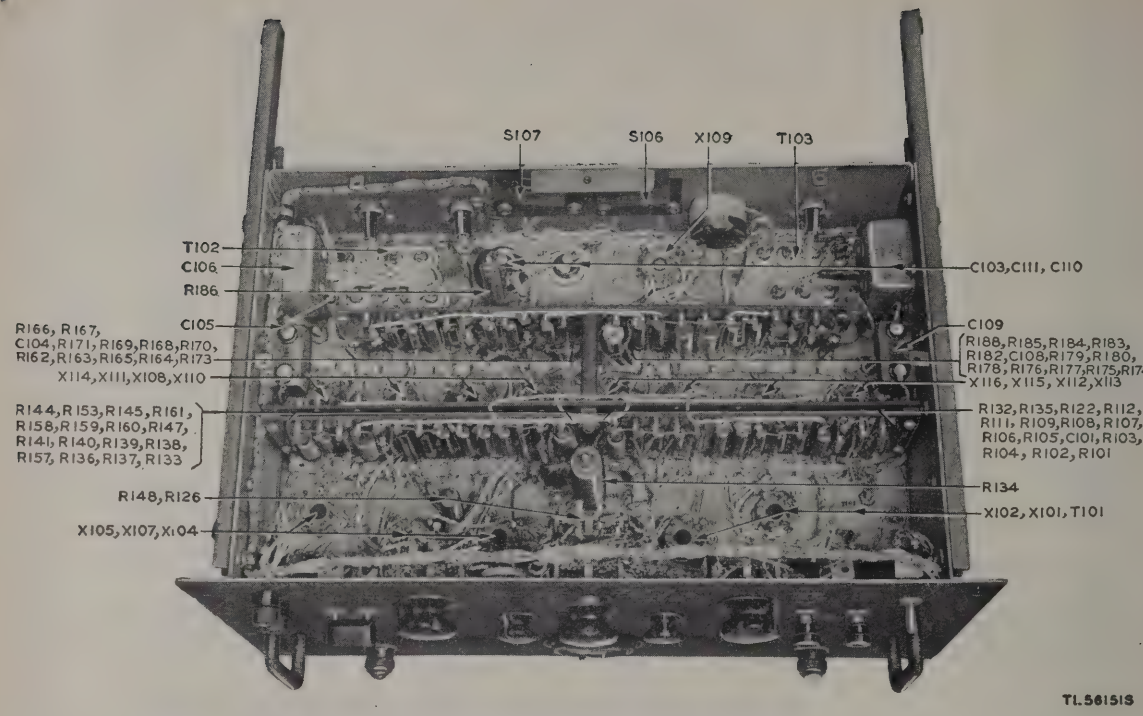

Figure 55. Control Unit C-292/TRA-7, bottom front view of chassis

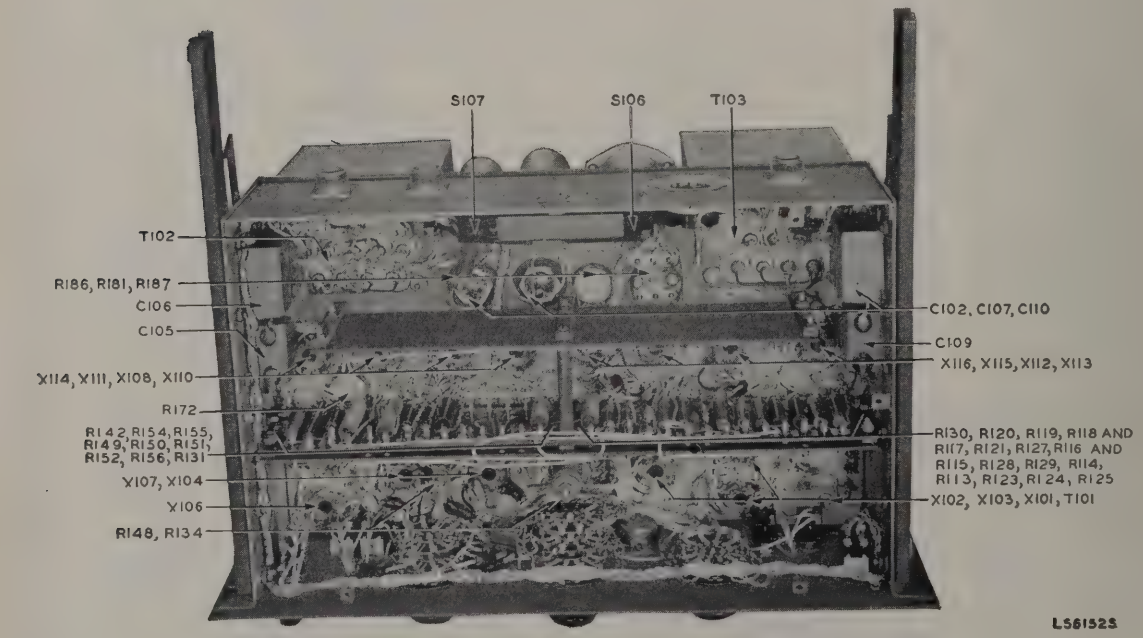

Figure 56. Control Unit C-292/TRA-7, bottom rear view of chassis.

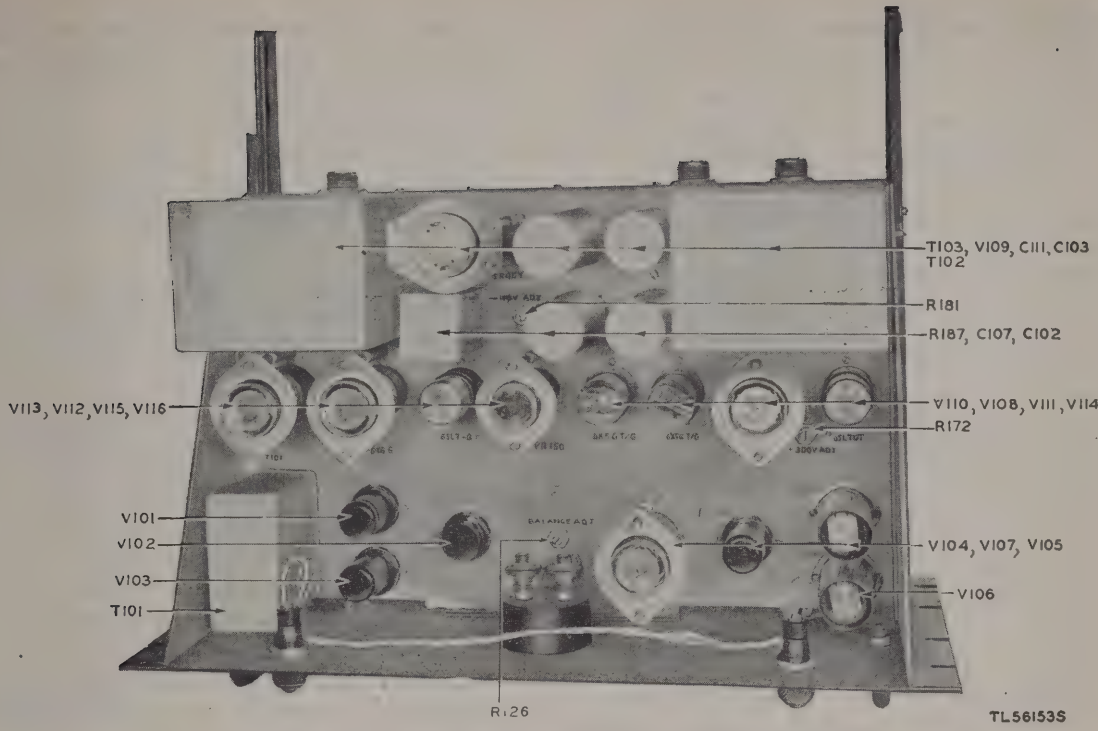

Figure 57. Control Unit C–292/TRA–7, top view of chassis.

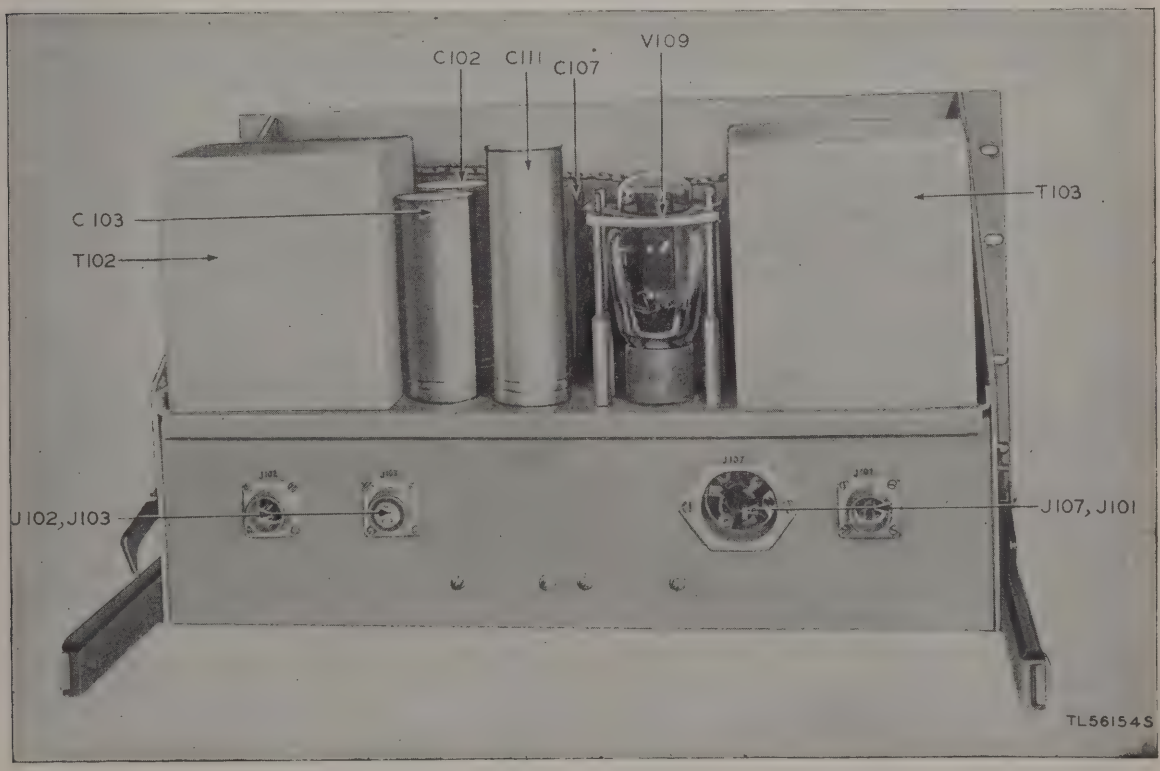

Figure 58. Control Unit C–292/TRA–7, rear view of chassis.

104. Wiring Diagrams

The wiring diagram for Frequency Shift Exciter O–39/TRA–7 is shown in figure 68. Wiring diagrams for Dual Diversity Converter CV–31/TRA–7 are shown in figures 69, 70, 71, and 72. The wiring diagram for Control Unit C–292/TRA–7 is shown in figure 73. In these diagrams each piece of apparatus has the same designation as that stamped on the equipment, and the wiring terminals on each piece of apparatus are shown in their proper relative location as viewed from the wiring side. The diagrams use the air-line system of showing connections. With this system each piece of apparatus is arbitrarily numbered and feed lines representing the individual wires are carried a short distance and terminated at a common line running at right angles to the feed lines. These feed lines are marked with the color of the wire and have a number near the base line which is the same as the number of the piece of apparatus to which the other end of the wire connects. It is not necessary to trace a connection through the common or base line and no provision is made for doing so. By observing the color and the identification number it is possible to move directly to the other end of the wire.

Section XVI. REPAIRS

105. Replacement of Parts

a. Frequency Shift Exciter O–39/TRA–7. (1) All parts of the frequency shift exciter are accessible and are readily replaced when found to be faulty.

(2) When replacing retardation coils L101 and L104, which are tapped tuning coils, unsolder and resolder the leads with extreme care to avoid undue heating of the tap terminals of the coil.

(3) When replacing retardation coils L102, L103, L105, L108, L109, and L110, use extreme care when unsoldering and resoldering the flexible leads to these coils to avoid breaking at the point at which the leads enter the coil.

(4) Due to space limitations, it is very desirable to use the tube puller provided under the top cover of the unit when removing tubes V101, V102, and V103.

(5) If it is necessary to increase the temperature of thermostat S109, turn the thermal switch adjusting screw counterclockwise until correct temperature is attained.

b. Dual Diversity Converter CV–31/TRA–7. (1) In general, all parts of the dual diversity converter are easily accessible and are easily replaced if found to be faulty.

(2) To replace either of the two band-pass filters Z105 or Z107 which are close to the front panel of the unit, it is necessary to remove the two adjacent band-pass filters, either Z106 or Z108.

(3) To replace any of the apparatus in the power unit, other than vacuum tubes, it is necessary to remove completely the tone oscillator unit. (See figs. 50 and 51.) This can readily be done by loosening the two supporting bolts with hexagonal heads located on either side panel. In addition, it is necessary to disconnect the coaxial cable assemblies attached to the rear of the tone oscillator unit.

(4) When replacing FINE TUNING knobs (CHANNEL A and CHANNEL B) align shaft slot with dot on front panel, then fasten knob on shaft with pointer to the right.

c. Control Unit C–292/TRA–7. (1) All parts of the control unit are readily accessible. To remove power transformer T102, it is necessary to first remove capacitor C106. To remove power transformer T103, it is necessary to first remove capacitor C110.

(2) When replacing thermistor R187, take care in unsoldering the leads from the defective part and soldering to the new thermistor. Due to critical circuit conditions, these leads must be kept short.

(3) There are three switches on this unit which require more careful attention in replacement. The SERVICE, METER, and OPERATION switches are multisection. When these switches are replaced, the wires connected to the switch should be marked carefully with tags or other devices to avoid misconnection when the new switch is installed. This practice is recommended in all cases where replacements require disconnection of numerous wires.

(4) When replacing capacitors C102 and C107, care should be taken to reinstall the capacitor shields. These shields are finished with a special insulating paint for isolating capacitors C102 and C107 from ground.

106. Special Tools

a. Two types of special tools are supplied with Frequency Shift Exciter O–39/TRA–7.

(1) Two hexagonal wrenches are provided to adjust the setscrews of the control knobs and shaft couplings. These two wrenches are located at the right-hand side of the unit above relay K101.

(2) A vacuum tube puller is provided to assist in removing certain of the vacuum tubes otherwise inaccessible due to space limitations as indicated in paragraph 105*a*(4). This tool is located under the top cover of the unit.

b. Two types of special tools are provided as part of Dual Diversity Converter CV–31/TRA–7.

(1) One special potentiometer adjusting tool is provided and is located along the right-hand side panel of the chassis. This tool is provided for adjusting the various screw driver potentiometer controls shows in figure 13. These controls may also be adjusted by means of a screw driver.

(2) Two hexagonal wrenches are provided to adjust the setscrews which retain the various control knobs to their shafts. One of these wrenches is located under the lower hinged cover covering the controls on the front of the panel and the other is located at the extreme rear of the chassis.

107. Unsatisfactory Equipment Report

a. When trouble in equipment used by the Army Ground Forces occurs more often than repair personnel feel is normal WD AGO Form 468 (Unsatisfactory Equipment Report) (fig. 59) should be filled out and forwarded through channels to the Office of the Chief Signal Officer; Washington 25, D. C.

b. When trouble in equipment used by Army Air Forces occurs more often than repair personnel feel is normal, Army Air Forces Form 54 should be filled out and forwarded to the Commanding General, Air Matériel Command, Wright Field, Dayton, Ohio, in accordance with AAF Regulations 15–54. If form is not available, prepare the data according to the sample form shown in figure 60.

Section XVII. ALIGNMENT AND ADJUSTMENT

108. Frequency Shift Exciter, Higher Echelon Tests and Alignment

a. Monitoring Circuit, Adjustment of Capacitors C119 to C122. Make this test and adjustment when any of the components associated with tubes V107, V109, and V108 are replaced and when the tone obtained in the headphones plugged into the PHONES 850 ∽ TEST jack is unsatisfactory.

(1) Connect a 600-ohm transmission measuring set capable of measuring 850 cycles at a level between 0 and −15 dbm, such as Decibel Meter TS–399/U, to the jack of the frequency shift exciter marked PHONES 850 ∽ TEST. Connect a 600-ohm variable frequency audio oscillator capable of delivering −10 dbm over the range of 200 to 1,000 cycles, such as Audio Oscillator TS–379/U, to the FREQUENCY METER IN jack. It is desirable that the oscillator be calibrated as near ±5 cycles as possible at 212.5, 425, and 850 cycles.

(2) Turn the TEST OSC switch to OFF and turn the 850 ∽ TEST VOLUME knob to the extreme clockwise position.

(3) Adjust the test oscillator to 850 cycles at −10 dbm. The output level at the PHONES 850 ∽ TEST jack as measured by the transmission measuring set should be greater than −15 dbm.

(4) Remove cord connected to transmission measuring set from PHONES 850 ∽ TEST jack and plug a pair of high-impedance headphones into that jack.

(5) Operate TEST OSC switch to 850 ∽ .

(6) Connect capacitors C119 to C122 into the circuit as required until a zero-beat note is obtained in the headphones and is indicated on the 850 ∽ TEST indicator tube. This indicates that the oscillator in the monitoring circuit of the frequency shift exciter is tuned to 850 ±5 cycles.

(7) Remove the connection between the audio oscillator and the frequency shift exciter. Connect the transmission measuring set to the PHONES 850 ∽ TEST jack of the frequency shift exciter. The transmission measuring set should indicate more than −15 dbm.

b. Oscillator Circuit, Adjustment of Trimmer Capacitors C101, C109, and C112.

WAR DEPARTMENT

UNSATISFACTORY EQUIPMENT REPORT

FOR	TECHNICAL SERVICE: Signal Corps — MATERIEL		DATE: 1 Feb 45
FROM	ORGANIZATION: 175 Signal Repair Co		STATION: APO 102
TO	NEXT SUPERIOR HEADQUARTERS: Supply Sec, Hq Fourth Army Sig Sv	STATION: APO 110	TECHNICAL SERVICE: Signal Corps

COMPLETE MAJOR ITEM

NOMENCLATURE	TYPE	MODEL	
Radio Transmitter BC-123-A	Ground, vehicular	A	
MANUFACTURER	**U. S. A. REG. No.**	**SERIAL NO.**	**DATE RECEIVED**
American Radio Corp	Order No. 1234-Phila-45	12345	5 Jan 45

EQUIPMENT WITH WHICH USED (*If applicable*): Radio Set SCR-456-A in Tank, Medium, M4

DEFECTIVE COMPONENT—DESCRIPTION AND CAUSE OF TROUBLE

PART NO.	TYPE	MANUFACTURER	DATE INSTALLED
Sig C Stk No. 3E47-2	Capacitor C20; fixed; 1-mf; 500 vdcw	American Radio Corp	When manufactured

DESCRIPTION OF FAILURE AND PROBABLE CAUSE (*If additional space is required, use back of form*)

Capacitor C20 shorts out due to humid operating conditions

DATE OF INITIAL TROUBLE	TOTAL TIME INSTALLED			TOTAL PERIOD OF OPERATION BEFORE FAILURE					
	YEARS	MONTHS	DAYS	YEARS	MONTHS	DAYS	HOURS	MILES	ROUNDS
15 Jan 45	-	-	-	0	0	5		-	-

BRIEF DESCRIPTION OF UNUSUAL SERVICE CONDITIONS AND ANY REMEDIAL ACTION TAKEN

Operation in tropics; heavy rainfall. Was replaced and set given moistureproofing and fungiproofing treatment, 20 Jan 45.

TRAINING OR SKILL OF USING PERSONNEL			RECOMMENDATIONS (*If additional space is required, use back of form*)
POOR	FAIR	GOOD	
		X	Substitute capacitor designed for tropical operation

ORIGINATING OFFICER

TYPED NAME, GRADE, AND ORGANIZATION	SIGNATURE
E.A.Wilson, 1st Lt, Sig C 175 Signal Repair Co	E. A. Wilson

FIRST ENDORSEMENT

TO CHIEF	TECHNICAL SERVICE	OFFICE	
NAME, GRADE, AND STATION		STATION	DATE

Instructions

1. It is imperative that the chief of technical service concerned be advised at the earliest practical moment of any constructional, design, or operational defect in matériel. This form is designed to facilitate such reports and to provide a uniform method of submitting the required data.
2. This form will be used for reporting manufacturing, design, or operational defects in matériel, petroleum fuels, lubricants, and preserving materials with a view to improving and correcting such defects, and for use in recommending modifications of matériel.
3. This form will not be used for reporting failures, isolated material defects or malfunctions of matériel resulting from fair-wear-and-tear or accidental damage nor for the replacement, repair or the issue of parts and equipment. It does not replace currently authorized operational or performance records.
4. Reports of malfunctions and accidents involving ammunition will continue to be submitted as directed in the manner described in AR 750-10 (change No. 3).
5. It will not be practicable or desirable in all cases to fill all blank spaces of the report. However, the report should be as complete as possible in order to expedite necessary corrective action. Additional pertinent information not provided for in the blank spaces should be submitted as inclosures to the form. Photographs, sketches, or other illustrative material are highly desirable.
6. When cases arise where it is necessary to communicate with a chief of service in order to assure safety to personnel, more expeditious means of communication are authorized. This form should be used to confirm reports made by more expeditious means.
7. This form will be made out in triplicate by using or service organization. Two copies will be forwarded direct to the technical service; one copy will be forwarded through command channels.
8. Necessity for using this form will be determined by the using or service troops.

W. D., A. G. O. Form No. 468
30 August 1944

This form supersedes W. D., A. G. O. Form No. 468, 1 December 1943, which may be used until existing stocks are exhausted.

U. S. GOVERNMENT PRINTING OFFICE 16—41340-1

TL19589C

Figure 59. WD AGO Form 468 (Unsatisfactory Equipment Report).

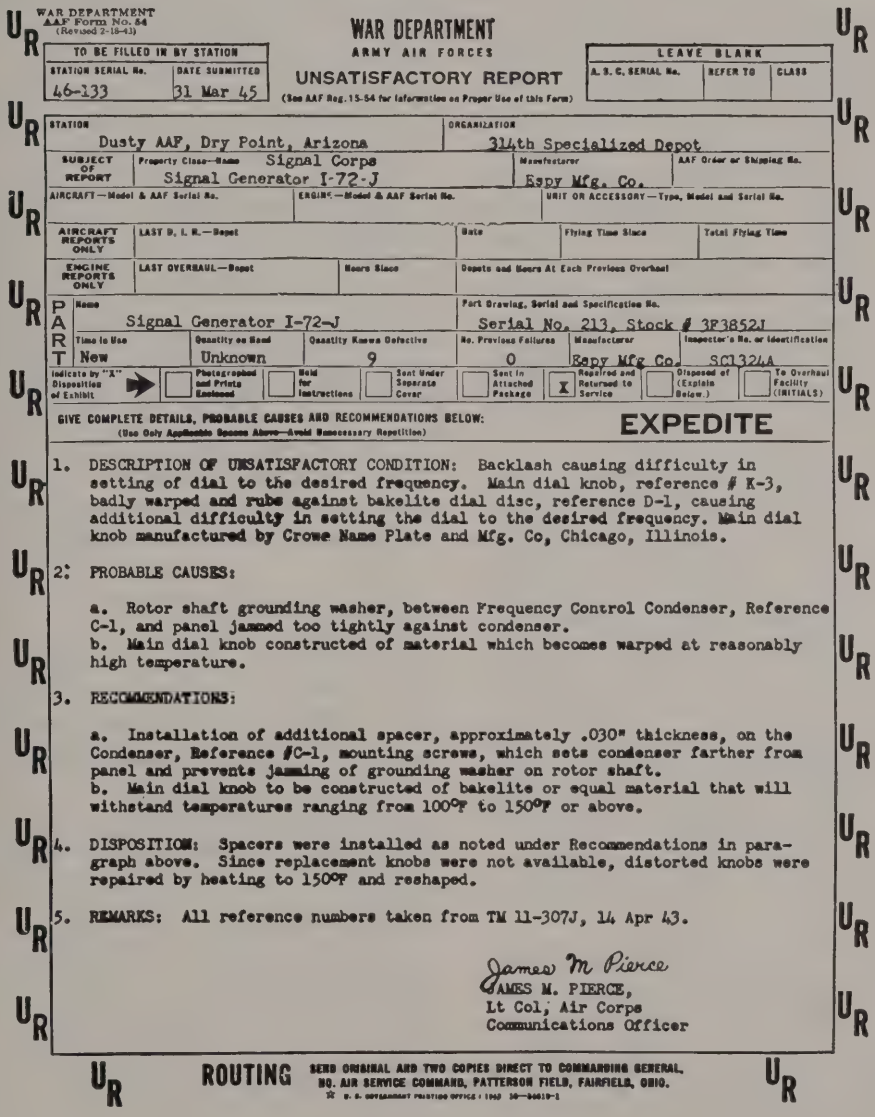

WAR DEPARTMENT
AAF Form No. 54
(Revised 2-18-43)

WAR DEPARTMENT
ARMY AIR FORCES
UNSATISFACTORY REPORT
(See AAF Reg. 15-54 for information on Proper Use of this Form)

TO BE FILLED IN BY STATION		LEAVE BLANK		
STATION SERIAL No.	DATE SUBMITTED	A. S. C. SERIAL No.	REFER TO	CLASS
46-133	31 Mar 45			

STATION	Dusty AAF, Dry Point, Arizona	ORGANIZATION	314th Specialized Depot
SUBJECT OF REPORT	Property Class—Name: Signal Corps Signal Generator I-72-J	Manufacturer: Espy Mfg. Co.	AAF Order or Shipping No.
AIRCRAFT—Model & AAF Serial No.	ENGINE—Model & AAF Serial No.	UNIT OR ACCESSORY—Type, Model and Serial No.	
AIRCRAFT REPORTS ONLY	LAST D. I. M.—Depot	Date	Flying Time Since / Total Flying Time
ENGINE REPORTS ONLY	LAST OVERHAUL—Depot / Hours Since	Depots and Hours At Each Previous Overhaul	

PART	Name	Part Drawing, Serial and Specification No.
	Signal Generator I-72-J	Serial No. 213, Stock # 3F3852J

Time in Use	Quantity on Hand	Quantity Known Defective	No. Previous Failures	Manufacturer	Inspector's No. or Identification
New	Unknown	9	0	Espy Mfg Co.	SC1324A

Indicate by "X" Disposition of Exhibit: [ ] Photographed and Prints Enclosed; [ ] Held for Instructions; [ ] Sent Under Separate Cover; [ ] Sent in Attached Package; [X] Repaired and Returned to Service; [ ] Disposed of (Explain Below.); [ ] To Overhaul Facility (INITIALS)

GIVE COMPLETE DETAILS, PROBABLE CAUSES AND RECOMMENDATIONS BELOW:
(Use Only Applicable Spaces Above—Avoid Unnecessary Repetition)

EXPEDITE

1. DESCRIPTION OF UNSATISFACTORY CONDITION: Backlash causing difficulty in setting of dial to the desired frequency. Main dial knob, reference # K-3, badly warped and rubs against bakelite dial disc, reference D-1, causing additional difficulty in setting the dial to the desired frequency. Main dial knob manufactured by Crowe Name Plate and Mfg. Co, Chicago, Illinois.

2. PROBABLE CAUSES:

a. Rotor shaft grounding washer, between Frequency Control Condenser, Reference C-1, and panel jammed too tightly against condenser.
b. Main dial knob constructed of material which becomes warped at reasonably high temperature.

3. RECOMMENDATIONS:

a. Installation of additional spacer, approximately .030" thickness, on the Condenser, Reference #C-1, mounting screws, which sets condenser farther from panel and prevents jamming of grounding washer on rotor shaft.
b. Main dial knob to be constructed of bakelite or equal material that will withstand temperatures ranging from 100°F to 150°F or above.

4. DISPOSITION: Spacers were installed as noted under Recommendations in paragraph above. Since replacement knobs were not available, distorted knobs were repaired by heating to 150°F and reshaped.

5. REMARKS: All reference numbers taken from TM 11-307J, 14 Apr 43.

James M Pierce
JAMES M. PIERCE,
1t Col, Air Corps
Communications Officer

ROUTING SEND ORIGINAL AND TWO COPIES DIRECT TO COMMANDING GENERAL, HQ. AIR SERVICE COMMAND, PATTERSON FIELD, FAIRFIELD, OHIO.

☆ U. S. GOVERNMENT PRINTING OFFICE : 1943 16—84019-1

15735S

Figure 60. Army Air Forces Form 54 (Unsatisfactory Report).

Trimmer capacitors C101, C109, and C112 will require readjustment whenever either coil L101 or L104, or other associated apparatus is replaced.

Note. Frequency Meter BC–221–( ) is a component of Frequency Meter Set SCR–211–( ).

(1) Insert the plug at one end of transmitter cable W101 into coaxial fitting J112 which is in turn connected to the NORMAL jack. Connect a 33,000-ohm, 2-watt, carbon resistor across the two terminals of the plug marked BC601 CRYSTAL SOCKET. Connect the ungrounded terminal of the plug marked BC601 CRYSTAL SOCKET to one terminal of a small capacitor (approximately 5mmf). Connect the other terminal of the capacitor to the ANT terminal of Frequency Meter BC–221. If no capacitor is available, a short length of wire can be used to couple the frequency meter to the exciter output. Wind a few turns of the wire around the terminals of the coaxial cable plug and connect the other end of the wire to the ANT post on the frequency meter. Connect a vacuum-tube voltmeter, capable of measuring voltages between 0 and 100 volts at frequencies between 2.0 and 6.0 megacycles, across the two terminals of the 33,000-ohm resistor.

(2) Plug a pair of high-impedance headphones into one of the two PHONES jacks on Frequency Meter SCR–211–( ). Connect the other PHONES jack to the vertical terminals of a cathode-ray oscilloscope. Connect the horizontal terminals of the cathode-ray oscilloscope to the output of the audio oscillator.

(3) Operate relay K101 by short-circuiting pin C of jack J106 (red), on front panel, to ground.

(4) To check the OSCILLATOR TUNING dial calibration, first set Frequency Meter BC–221–( ) at 2,000 kc. Turn the OSCILLATOR TUNING dial of the frequency shift exciter to 0.500. Turn BUFFER TUNING dial to 7.0. Turn SHIFT dial to 85.0. Check that knob S103 on the front of the buffer compartment of the frequency shift exciter is turned to position 1. Operate TEST key to MARK and OSC RANGE switch to 2–3.5 position. Adjust oscillator padding capacitor C101 until oscillator is tuned to 2,000 kc as indicated by zero beat in the headphones connected to the PHONE jack of Frequency Meter BC–221–( ). Adjust buffer padding capacitor C109 for maximum brilliance of BUFFER INDICATOR lamp. The output voltage as measured by the vacuum tube voltmeter should be greater than 30 volts. Turn the OSC RANGE switch to the 3.5–6 position. Retune the BUFFER TUNING dial for maximum illumination of BUFFER INDICATOR lamp. The output voltage as measured on the vacuum tube voltmeter should indicate at least 40 volts.

(5) To check the calibration of the SHIFT dial, turn the dial to 100. Turn BUFFER TUNING dial to 15. Check that Frequency Meter BC–221–( ) is set at 2,000 kc. Turn the oscillator to 2,000 kc by turning OSCILLATOR TUNING dial until a zero beat is obtained in the headphones connected to the PHONES jack of Frequency Meter BC–221–( ) (approximately 0.500 on OSCILLATOR TUNING dial). The buffer stage should be detuned (buffer indicator lamp out) during this check. Operate TEST key to SPACE. Audio tone output of Frequency Meter BC–221–( ) should be 1,000 ±5 cycles. If not, adjust capacitor C112 and repeat until the frequency shift is 1,000 ±5 cycles.

(6) Restore relay K101 to nonoperate condition.

109. Dual Diversity Converter, Internal Alignment of Input Circuit

The following instructions assume that the radio receivers have already been aligned so that the i-f stages of the receivers are peaked at 470 kc. The alignment (*a* and *b* below) will be based on a steady r-f carrier being fed into receiver A (or receiver B if desired) and the receiver VERNIER tuning adjusted so that the i-f input to the converter is exactly 47 kc. For bench tests, a signal generator or Frequency Meter BC–221–( ) could be used to inject a strong i-f carrier into the input connections of the dual diversity converter. However, final alignment should be performed using associated receivers.

a. Alignment of Channel-A Input Circuit. (1) Tune in a strong r-f carrier with receiver A. Reduce volume of receiver B to zero. Be sure the receiver is on MVC, CRYSTAL PHASING control fully clockwise to OUT, and C.W.-OSC. switch at OFF.

(2) Tune VERNIER of receiver A for exact

center of i-f pass band of 470 kc. This can be done by determining the vernier readings for the outsides of the pass band and setting the control midway between these limits. The following more accurate method involves the use of the CRYSTAL PHASING control on the receiver and can be used only if a strong r-f carrier is present.

(*a*) Find the approximate center of the i-f pass band of the receiver with the VERNIER control. The c-w oscillator may be used to locate the signal but should be turned off for all later adjustments.

(*b*) Turn the CRYSTAL PHASING control counterclockwise until the audio output is a minimum. Keep the volume control at maximum.

(*c*) Rock the VERNIER control until characteristic chirps or beats are heard in the output indicating that the i-f input frequency is exactly in resonance with the 470-kc crystal in the crystal phasing circuit.

Note. The loudspeaker can usually be used; however, at times the use of headphones with lower volume may be more desirable.

(*d*) After the center of the i-f pass band is found, turn the CRYSTAL PHASING control clockwise to the OUT position and leave it there for all later operations.

(3) Turn METER B switch to INPUT and be sure CHANNEL A, FINE TUNING control is straight up.

(4) Remove or turn the screws on front panel of dual diversity converter so that the chassis can be removed sufficiently to reach the screw driver controls. Adjust capacitor C105 (fig. 13) to obtain maximum indication on meter B and so that meter A reads zero, indicating the center of the 50-kc discriminator characteristic. This will be indicated on meter A when the CHANNEL A, FINE TUNING control is rotated 90° to both sides of straight up at which time the pointer should deflect approximately the same amount to either side of zero and in the same direction that the knob is turned. The red markers on both oscillator capacitors C105 and C106, and input capacitors C101 and C103, when adjacent to black dot on chassis, indicate that the capacitance is a minimum. When using Radio Receiver R182( )/MRC–2, these capacitors should be almost all out since the intermediate frequency of the receivers is 470 kc.

Note. The oscillator of channel B may give a spurious response which will show up as input on meter B when adjusting. To guard against this trouble it may be desirable to remove tube V102 from its socket while making oscillator adjustments on channel A.

(5) After the proper oscillator frequency has been found, adjust the input circuit of the converter by means of capacitor C101 (fig. 13) for a maximum indication on meter B. If meter B goes off scale, decrease the volume of receiver A.

(6) Repeat the alignment of capacitor C105 as in (4) above.

(7) If proper adjustments have been made, it should be possible to swing the CHANNEL A, FINE TUNING control to either side of straight up and obtain deflections on opposite sides of zero. The input level shown on meter B should be maximum when meter A is at zero. The level should decrease slightly as meter A travels away from zero in either direction. The same results should be obtained when the receiver VERNIER control is rotated to both sides of the position of exact frequency.

(8) Check that meter A deflects to the left when the CHANNEL A FINE TUNING control is turned to the left, and to the right when the FINE TUNING control is turned to the right.

b. Alignment of Channel-B Input Circuit. The method of adjusting channel B is identical to that used for channel A except that the input level and the discriminator output cannot be read simultaneously. Both are read on meter B, depending upon the position of the METER B switch.

(1) Turn the volume control of receiver B to maximum and the volume control of receiver A to minimum.

(2) Locate the center of the i-f pass band as in *a*(2) above.

(3) Reinstall tube V102 if it was removed.

(4) Set METER B switch at INPUT and locate the approximate oscillator frequency by adjusting capacitor C106 to obtain a maximum reading on meter B.

Note. The oscillator of channel A may give a spurious response which will show up as input on meter B when adjusting. To guard against this trouble, it may be desirable to remove tube V101 from channel A while making oscillator adjustments on channel B.

(5) Turn the input circuit to obtain a maxi-

mum reading on meter B by adjusting capacitor C103.

(6) Turn METER B switch to CHAN B. Set CHANNEL B, FINE TUNING control in a straight up position. Readjust oscillator capacitor C106 to obtain a zero reading on meter B, thus indicating the center of the 29.3-kc discriminator characteristic. Vary the FINE TUNING control 90° to either side and note that meter B swings approximately equal amounts to either side of zero. Check that the meter swing is in the same direction as the CHANNEL B, FINE TUNING control is turned.

(7) Return METER B switch to INPUT and again vary the CHANNEL B, FINE TUNING control 90° to either side and note that the input level is maximum when the control is straight up and decreases only a small amount as the control is moved 90° to either side or straight up.

(8) Reinstall tube V101 if it was removed.

110. Dual Diversity Converter, Internal Alignment of Output Circuit

The following adjustments should be made with a strong i-f signal input to the dual diversity converter and will be covered accordingly. The alignment covered steps indicated in *a* through *c* below, however, can be performed with no signal input if tube V105 is removed in order to disable the mark-hold circuit while adjustments are made.

a. Set the OUTPUT switch at MARK and the METER B switch at NEUTRAL. Adjust the NEUTRAL OUTPUT control knob for a reading of +60 on meter B.

b. Turn the METER B switch to POLAR and adjust the POLAR OUTPUT MARK control knob for a reading of +25 on meter B.

c. Turn the OUTPUT knob to SPACE and adjust the POLAR OUTPUT, SPACE knob for a reading of −25 on meter B.

d. Turn the OUTPUT knob to NORMAL or REVERSE, and throw the DRIFT COMPENSATOR switch to IN. Turn the LIMITER knob to maximum clockwise position, and turn the AMP GAIN knob and the COMP AMP screw driver control fully counterclockwise.

e. Feed a strong steady 470-kc signal into channel A of the converter and adjust the signal strength so that, with the CHANNEL A, FINE TUNING control in the straight-up position, meter A will read zero (center of discriminator output).

f. Return the METER B switch to POLAR and adjust the BIAS A screw driver control (R155) to a point where the polar output current indicated on meter B just changes from mark to space, and then vice versa. Set the control to midposition between the two points found.

Note. This adjusts the d-c output loop to have an operating point corresponding to about 0 volt from the discriminator.

g. Turn the METER B switch to CHAN A + B. Meter B should read within plus or minus 10.

h. Turn the COMP AMP control (R145) slightly clockwise until meter B indicates about five divisions higher than the reading obtained in *g* above.

i. Turn the BIAS B screw driver control (R160) back and forth until the meter B reading just changes between the limits established in *g* and *h* above. For instance, if the reading obtained in *g* above was +6 and the adjustment of the COMP AMP control (*h* above) gave +11, the limits are +1 and +11.

j. Set the BIAS B control halfway between limits. With the BIAS A and BIAS B screw driver controls set and the METER B knob at CHAN A + B, turn the COMP AMP screw driver control until meter B indicates +70 or −70.

k. Turn the AMP GAIN knob clockwise until the output can be changed from a mark to space, or vice versa, by a fast movement of the CHANNEL A (or CHANNEL B), FINE TUNING knob. Restore the CHANNEL A (or CHANNEL B), FINE TUNING knob to straight up (zero reading on meter A).

l. Turn the COMP AMP screw driver control (R145) to +70 or −70 (on meter B), then turn the COMP BAL screw driver control (R194) for balance. Repeat until alternate equal indications are obtained of +70 and −70 when CHANNEL A, FINE TUNING knob is given a fast movement.

m. Slowly turn the LIMITER knob counterclockwise until the indication on meter B starts to drop below 70. Set the LIMITER knob at the point where the meter reading is just barely starting to reduce.

n. The final adjustment of the AMP GAIN

control requires an input of miscellaneous keying, and is covered under operation. (See par. 30*b*(3).) Operational tests of the converter are also covered under operation. (See par. 27.)

111. Dual Diversity Converter, Higher Echelon Tests and Alignment

a. GENERAL. The tests and alignment procedures outlined in this paragraph are intended for use by higher echelon radio repair organizations to determine the quality of performance of a repaired Dual Diversity Converter CV–31/TRA–7. A converter which passes the tests outlined below is suitable for field operation. The procedures for checking the performance of the converter in *b* through *h* below are based on tests which are made in the factory. In case limits specified in the tests are not met, the trouble should be checked using the trouble-shooting chart in paragraph 98 for the trouble correction. The procedures are based on the assumption that certain types of testing facilities including a vacuum-tube voltmeter, a cathode-ray oscilloscope, adjustable test oscillator, etc., are available at the repair depot.

b. OPERATING VOLTAGES. (1) The satisfactory operation of the converter depends on the proper voltages being applied to the various tube elements. These voltages may be regularly checked by observing the rectified output voltages of the power supply.

(2) Measure the input voltage to the primary of power transformer T301 or T302 and adjust this voltage to 105, 115, or 125 volts at the time of installation. (See sec. III.) Check that connections are made to the proper taps on the primaries of transformers T301 and T302 corresponding to the adjusted voltage of the power supply. Check the rectified output voltages as follows:

(3) Turn METER B knob successfully to the position indicated, and check that the readings are within the limits shown below.

METER B switch position	E301 terminal No. to ground	Actual voltage (E)	METER B reading
+275V	3	+280 ± 15	E/5 ± 6
REG +150V	4	(*)	E/5 ± 5
REG −150V	11	−145 to −160	E/5 ± 5
−150V	13	−150 ± 10	E/5 ± 5
−400V	12	−400 ± 20	E/5 ± 8

* Within ±3 volts of the REG −150V, but of a positive polarity. (See par. 95, item 5.)

c. INPUT CIRCUIT. Disconnect the coaxial cable assemblies between the converter and the radio receivers of channels A and B. Set the CHANNEL A (and B), FINE TUNING capacitors C102 and C104 at their midpositions. The locations of the screw driver controls C101, C105, C103, and C106 involved in the procedures below are shown in figure 13.

(1) *CHANNEL A (50 KC). (a)* Connect a signal generator to the CHAN A receptable (J101) of the converter and set the signal generator frequency at a value corresponding to that of the i-f input from the radio receivers (470 kc for Radio Receiver R–182( )/MRC–2). Set the input at 1 volt. Do no connect an input to the CHAN B receptacle (J102) while making tests on channel A.

Note. The voltage requirements specified in this subparagraph are based on the use of a signal generator of 100-ohm output impedance.

(*b*) Connect a vacuum-tube voltmeter from terminal 3 of network Z103 to ground and adjust tuning capacitor C101 with a screw driver for maximum indication on the voltmeter (13 to 22 volts).

(*c*) Connect the vacuum-tube voltmeter from terminal 2 of network Z104 to ground and check that the voltage at this point throughout the complete range of tuning capacitor C105 is 1.75 to 3.5 volts.

(*d*) Connect the vacuum-tube voltmeter from terminal 3 of BAND WIDTH switch S101 (or from terminal 4 of mounting strip E103) to ground.

(*e*) Turn the BAND WIDTH knob to NARROW.

(*f*) Set the test oscillator output at 0.1 volt and adjust the tuning capacitor C105 to give a maximum voltage indication (10 to 25 volts).

(*g*) Turn the BAND WIDTH knob to WIDE. Check that the voltage indication is between 20 and 40 volts.

(2) *CHANNEL B (29.3 KC). (a)* Connect the signal generator to the CHAN B receptacle (J102) of the converter and set the signal frequency at a value corresponding to that of the i-f input from the radio receivers. Set the signal generator output at 1 volt. Do not connect an input to the CHAN A receptacle (J101) while making tests on channel B.

(*b*) Connect a vacuum-tube voltmeter from terminal 3 of network Z101 to ground, and

adjust tuning capacitor C103 for maximum indication on the voltmeter (13 to 22 volts).

(*c*) Connect the vacuum-tube voltmeter from terminal 2 of network Z102 to ground, and check that the voltage at this point throughout the complete range of tuning capacitor C106 is 1.75 to 3.5 volts.

(*d*) Connect the vacuum-tube voltmeter from terminal 3 of the BAND WIDTH switch S101 (or from terminal 4 of mounting strip E103) to ground.

(*e*) Turn the BAND WIDTH knob to NARROW.

(*f*) Set the test oscillator output at 0.1 volt, and adjust tuning capacitor C106 to give a maximum voltage indication (8 to 25 volts).

(*g*) Turn the BAND WIDTH knob to WIDE. Check that the voltage indication is between 15 and 40 volts.

d. LIMITER CIRCUIT. After aligning the input circuit according to *c* above, check the limiter circuit in accordance with the following procedures.

(1) *CHANNEL A (50 KC).* *(a)* Connect the signal generator to channel A and adjust its frequency to the particular frequency to be used (470 kc when using Radio Receiver R–182–( )/MRC–2. Do not connect any input to channel B.

(*b*) Turn the BAND WIDTH knob to WIDE and the METER B knob to INPUT.

(*c*) Adjust the test oscillator output level to give a meter indication of +50.

(*d*) Check that the voltage input to the limiter as measured by a vacuum-tube voltmeter from terminal 3 of the BAND WIDTH switch S101 (or from terminal 4 of mounting strip E103) to ground is not greater than 6 volts.

(*e*) Connect the vacuum-tube voltmeter from terminal 4 of tube V108 (or from terminal 42 of mounting strip E103) to ground, and check that the voltage is 6 ± 2 volts.

(*f*) Set the output level of the test oscillator at 0.5 millivolt.

(*g*) Check that the vacuum-tube voltmeter (connected in accordance with (*e*) above) indicates at least 4 volts.

(*h*) Raise the output level of the test oscillator to 500 millivolts and verify that the voltmeter indicates 4 to 8 volts.

(*i*) Connect an oscilloscope to terminal 4 of tube V108 (or from terminal 42 of mounting strip E103) to ground. Observe that the waveform of the 50-kc signal is approximately as shown in the upper part of figure 61.

(2) *CHANNEL B (29.3 KC).* *(a)* Transfer the signal generator from channel A to channel B. Do not connect any input to channel A.

(*b*) Repeat steps in (1) (*b*) through (*i*) above.

(*c*) Connect an oscilloscope from terminal 4 of tube V108 (or from terminal 42 of mounting strip E103) to ground. Observe that the waveform of the 29.3-kc signal is approximately as shown in the lower part of figure 61.

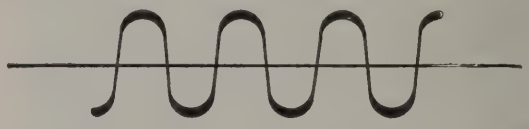

(A) 50-KC LIMITER OUTPUT

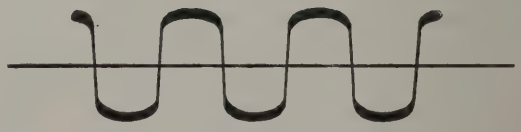

(B) 29.3-KC LIMITER OUTPUT TL561593

Figure 61. Dual diversity converter, signal waveform of limiter output circuits.

c. DISCRIMINATOR CIRCUIT. (1) *CHANNEL A (50 KC).* *(a)* Connect the signal generator to channel A.

(*b*) Set the signal generator to the operating frequency and adjust its output to 0.050 volt.

(*c*) Check that the CHANNEL A, FINE TUNING knob, is set at the middle of its range.

(*d*) Adjust tuning capacitor C105 until a point is found where a slight movement in either direction causes meter A to go off scale.

(*e*) Set capacitor C105 at the position which gives a zero indication on meter A.

(2) *CHANNEL B (29.3 KC).* *(a)* Transfer the signal generator to channel B.

(*b*) Turn the METER B knob to CHAN B, and check that the CHANNEL B, FINE TUNING knob is set at the middle of its range.

(*c*) Adjust capacitor C106 to give a zero indication on meter B.

(3) *CHANNEL A (50 KC).* (*a*) In the tests in this subparagraph and in (4) below it is necessary to use a source of frequency which can be accurately changed by 850 cycles. Since it is difficult to obtain a signal generator whose frequency may be changed 850 cycles, it is suggested that a Frequency Shift Exciter O–39/TRA–7 be used as a signal generator. Couple the output of the frequency shift exciter to a Radio Receiver R–182( )/MRC–2. Tune the exciter to 2.0 mc and set the SHIFT dial for an 850-cycle shift, then tune the radio receiver to the exciter output with the TEST key of the exciter thrown to MARK.

(*b*) Connect the signal generator or the i-f output from the radio receiver to channel A.

(*c*) Increase the frequency of the signal generator by 425 cycles (2 mc + 425 cycles) to simulate a spacing signal.

(*d*) Check that meter A indicates 50 (+10) to the left of zero.

(*e*) Decrease the oscillator frequency 850 cycles (2 mc—425 cycles) for a marking signal.

(*f*) Check that the marking signal causes meter A to indicate 50 (±10) to the right of zero.

(4) *CHANNEL B (29.3 KC).* (*a*) Transfer the output from the signal generator or the i-f output from the radio receiver to channel B.

(*b*) Repeat steps (*b*) through (*f*) in (3) above, using meter B.

f. OUTPUT CIRCUIT. The locations of the screw driver controls COMP AMP, BIAS A, BIAS B, and COMP BAL involved in the procedures below are shown in figure 13. The four controls can be adjusted from the top by using the potentiometer adjusting tool.

(1) Turn the OUTPUT knob to MARK.

(2) Turn the METER B knob to CHAN A + B and check that meter B indicates +55 ±10.

(3) Turn the OUTPUT knob to SPACE and check that meter B indicates −55 ±10.

(4) Turn the BIAS A screw driver control fully counterclockwise.

(5) Turn the OUTPUT knob to SPACE.

(6) Using a voltmeter having a resistance of 20,000 ohms per volt, check that the voltage from pin 8 of tube V113 to ground is +250 ±20 volts.

(7) Turn the OUTPUT knob to MARK.

(8) Check that the voltage from pin 8 of tube V113 to ground is less than +20 volts, and the voltage between pin 4 and pin 5 (−150 volts) of tube V117 is 65 ± 10.

Note. If the voltage bewteen pins 4 and 3 of tube V117 is not 65 ± 10 volts, reconnect the lead between pin 4 of tube V117 (which is also connected to pin 5 of tube V116) and resistors R163 to R166 to the junction of the resistors R162 to R167 which provides a voltage nearest to −65 volts.

(9) Remove tube V105 from its socket and check that the voltage from pin 8 of tube V117 to ground is +185 ±20 volts.

(10) Turn the OUTPUT knob to SPACE and check that the voltage changes to −145 ±10 volts. Replace tube V105 in its socket.

(11) Check that the operation of the OUTPUT switch to MARK and to SPACE results in keying the polar and neutral loop circuits.

(12) Turn the METER B knob to POLAR.

(13) Check that the POLAR OUTPUT, MARK and SPACE potentiometers can be adjusted to produce loop currents as follows:

External loop resistance (ohms) between terminals A and B of jack J103	Meter indication * (milliamperes)
0	Less than ±20
2,000 (approximately)	More than ±25

* Deflection to the right—MARK; deflection to the left—SPACE.

(14) Turn the METER B switch to NEUTRAL.

(15) Check that the NEUTRAL OUTPUT potentiometer can be adjusted to produce neutral currents as follows:

External loop resistance (ohms) between terminals D and E of jack J103	Meter indication * (milliamperes)
0	Less than +40
800	More than +60

* Deflection to the right—MARK.

g. DRIFT COMPENSATOR CIRCUIT. (1) Turn the OUTPUT knob to NORMAL and the AMP GAIN knob fully counterclockwise.

(2) Operate the DRIFT COMPENSATOR switch to IN.

(3) Turn the LIMITER knob fully clockwise.

(4) Turn the COMP AMP screw driver control fully counterclockwise. Turn the METER

B switch to CHAN A + B and check that meter B indicates zero (±5) volts.

(5) Turn the METER B switch to POLAR and adjust the BIAS A screw driver control to the two positions where a slight movement of the control changes the loop condition from a mark to a space, and a space to a mark. Leave the BIAS A control midway between the two positions.

(6) Turn METER B switch to CHAN A + B.

(7) Turn the COMP AMP screw driver control in a clockwise direction until the meter B reading is increased by five to the right or to the left depending upon whether the indication in step (4) above is to the right or to the left.

(8) Adjust the BIAS B screw driver control to a position where the meter B reading in step (7) above changes back and forth between positive and negative readings with a slight movement of the control.

(9) Set the COMP AMP screw driver control at its midposition.

(10) Turn the AMP GAIN control clockwise until the d-c loops can be changed from a mark to a space by the CHANNEL A (or B), FINE TUNING knob, while an i-f input is connected to the CHAN A (or CHAN B) receptacle (J101 or J102).

(11) Adjust the screw driver controls COMP BAL and COMP AMP until meter B indicates +70 ±5 for a mark (OUTPUT switch at MARK) and −70 ±5 for a space (OUTPUT switch at SPACE).

Note. The above readings should be steady. Wait several seconds, if necessary, to obtain steady meter indications.

(12) Slowly turn the LIMITER knob counterclockwise until the meter reading of +70 for a mark (step (11) above) reduced to +50, and at the same time, the meter reading of −70 for a space reduces to a value between −40 and −60.

(13) Turn the LIMITER knob fully clockwise and then turn the knob slowly counterclockwise until the meter indication is just on the verge of being decreased.

h. Tone Oscillator Circuit. (1) Turn the OUTPUT knob to MARK.

(2) Connect a headphone to the PHONES KEYED TONE jack J105 and check that there is a tone output.

(3) Turn the output knob to space and check that there is no tone output.

i. Mark-Hold Circuit. A Frequency Shift Exciter O–39/TRA–7 and a Radio Receiver R–182( )/MRC–2 are required as a source of frequency shift signals for the tests in (1) through (9) below. If no source of frequency shift signals is available, operational tests as outlined in paragraph 31 should be used to test the mark-hold circuit.

(1) Connect the i-f output from the receiver to channel A and operate the DRIFT COMPENSATOR switch to OUT and the OUTPUT switch to REVERSE.

(2) Tune the frequency shift exciter to 2.0 mc and set the SHIFT dial for an 850-cycle shift. Then tune the radio receiver to the exciter output with the TEST key of the exciter thrown to MARK.

(3) Replace tube V105 in the circuit. Throw the TEST key of the exciter to SPACE.

(4) Turn the METER switch to INPUT and adjust the input to the converter to give an indication of 50 on meter B.

(5) Adjust the MARK HOLD LEVEL knob until the output circuit just remains spacing.

(6) Check that the output restores to marking when the input from the radio receiver is reduced to zero.

(7) Connect the i-f output from the radio receiver to channel B and adjust the i-f input from the radio receiver to channel B to give an indication of 50 on meter B.

(8) Check that the output circuit just remains spacing.

(9) Reduce the input from the radio receiver to zero and check that the output restores to marking.

112. Control Unit, Higher Echelon Tests and Alignment

No special tests are required to check that a repairing Control Unit C–292/TRA–7 is suitable for field operation. A control unit which will meet the initial adjustments as outlined in paragraph 24, the voltage measurements in paragraph 102, and the resistance measurements in paragraph 103, should be suitable for field operation.

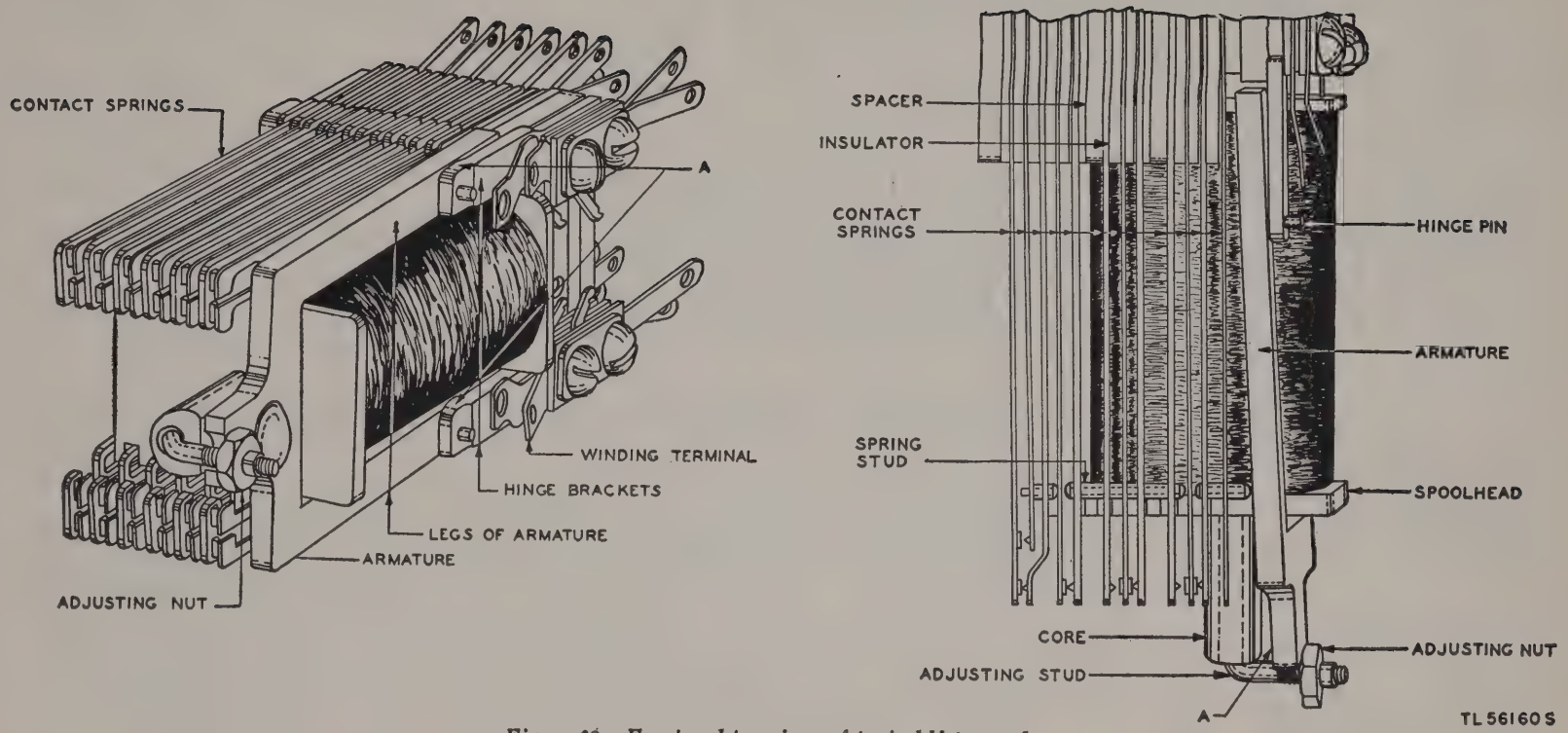

Figure 62. Front and top views of typical U*-type relay.*

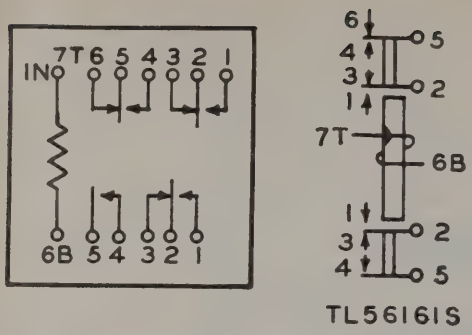

Figure 63. Winding and spring terminal arrangements viewed from the rear (terminal side) of U*-type relay.*

113. Adjustment of Relays K101 and K401

a. General. (1) Relays K101 in the frequency shift exciter circuit and K401 in the tone oscillator circuit of the dual diversity converter are relays of the manufacturer's U-type. (See fig. 62.) These relays are equipped with covers. Keep the covers on the relays except when it is necessary to remove them for trouble shooting or repair.

(2) The adjustment requirements for U-type relays are both mechanical and electrical. The mechanical requirements include the proper position of springs, armature travel, spring tensions, etc. The electrical requirements are the specified currents through the winding which should cause the relay to operate or to release from the operated position. Different requirements are usually specified for test and for readjustment. Use the test values if it is necessary to check the relay when shooting trouble, otherwise use the readjustment requirements.

(3) The relay winding and spring terminals are numbered on the schematic diagrams. The numbering plan for a typical U-type relay is shown in figure 63. The contact spring and winding terminals are numbered consecutively from right to left facing the terminal side of the relay. The top and bottom spring assemblies of the relay are each numbered in this sequence. In the schematic diagrams, the top and bottom relay spring pile-ups are shown, respectively, above and below the relay core and winding. A relay winding terminal is followed by the letter "T" or "B" to indicate whether it is aligned with the top or bottom spring terminal pile-ups.

(4) The tools and gauges used for adjusting relays K101 and K401 or burnishing their contacts are tabulated below. All codes are Western Electric codes.

Tools and gauges	Description
474A	3/16" x 1/4" hexagonal closed-end offset wrench
505A	Spring adjuster for thin (0.013") springs
507A (2 reqd)	Spring adjuster for springs other than 0.013"
265C	Contact burnisher
70D	50–0–50 gram gauge
132-type	Thickness gauges

b. Burnishing Relay Contacts. (1) When a pair of contacts appears to be closed but the electrical circuit is open, burnish the contacts using a clean No. 266 blade of the 265C contact burnisher. It is very important to keep the blades of contact burnishers clean as well as any thickness gauges which are used for the contacts. These tools should be wiped off frequently with a clean, dry cloth before being placed against each contact and should be frequently wiped with a clean cloth dampened with carbon tetrachloride.

(2) To burnish normally open contacts, place the blade of the burnisher between the contacts and operate the relay manually to give a slight pressure against the blade of the burnisher. At the same time move the blade back and forth. The desired result is usually obtained by rubbing the burnisher between the contacts two or three times. In the case of normally closed contacts, the tension of the springs themselves will usually furnish sufficient pressure against the burnisher. On springs having heavy tension, lift one of the springs away to insert the burnisher.

c. Adjustment of Relays K101 and K401. (1) *Armature travel.* The armature travel for relays K101 and K401 is 0.047 inch. To adjust the armature travel, insert the 132R (0.047 in.) gauge between the armature and core with the long axis of the gauge parallel to the axis of the core. Turn the adjusting nut with the 474A wrench until the gauge fits snugly but does not bind.

(2) *Stud gaps.* Stud gaps labeled "T" (fig.

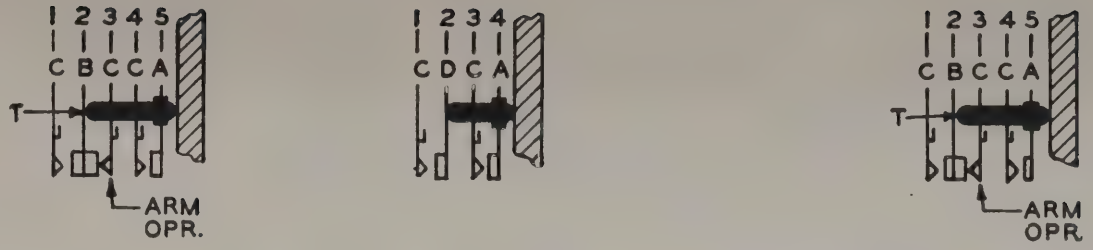

TENSION ALL SPRINGS TOWARD THE ARMATURE. APPLY THE GAUGE SO THAT ITS TIP ENGAGES BOTH PRONGS OF FORKED SPRINGS. ON SOLID SPRINGS APPLY THE TIP OF THE GAUGE JUST IN FRONT OF CONTACT. USE THE 70D GAUGE. TENSION OF SPRINGS MARKED "ARM OPR" IS MEASURED WITH THE ARMATURE IN THE OPERATED POSITION; TENSION OF ALL OTHER SPRINGS IS MEASURED WITH THE ARMATURE IN THE NON-OPERATED POSITION.	TENSION (GRAMS)	
	TEST	READJUST
THE MINIMUM ARMATURE BACK TENSION MEASURED AS THE ARMATURE LEAVES ITS BACK STOP.	18	22
THE SPRINGS DESIGNATED "A" HAVE NO DEFINITE TENSION REQUIREMENT, OTHER THAN THAT THE COMBINED PRESSURES OF THE TOP AND BOTTOM "A" SPRINGS (TOGETHER WITH "D" SPRING OF RELAY K101) WHICH PRODUCE PRESSURE AGAINST THE ARMATURE SHALL BE SUFFICIENT TO MEET THE ARMATURE BACK TENSION REQUIREMENT ABOVE.		
MINIMUM TENSION OF "B" SPRINGS MEASURED AS THE CONTACTS BREAK.	18	20
MINIMUM TENSION OF "C" SPRINGS MEASURED AS THE SPRING TANG LEAVES THE SPOOLHEAD.	25	30
MINIMUM TENSION OF "D" SPRINGS MEASURED AS THE SPRING LEAVES THE STUD.	5	6

TL561625

Figure 64. Spring arrangements and spring tension requirements of U-type relay.

64) should be a minimum of 0.006 inch. Stud gaps labeled "S" should have a slight clearance.

(3) *Contact make.* (*a*) Both contacts on the forked springs should make with their associated contacts when the relay is in the electrically operated position for normally open contacts, and in the unoperated position for normally closed contacts.

(*b*) All normally open contacts should make when the relay armature is electrically operated against a 132A (0.008 in.) gauge placed between the armature and the core. The requirements are met if at least one of the two contacts of the forked springs close or make.

Note. Stud gaps (*c*(2) above) insure that normally closed contacts close before the armature reaches the end of its travel when the relay releases.

(4) *Contact separation.* The minimum separation between each pair of contacts normally open, or between each pair of contacts that are opened when the relay is *electrically* operated, shall be a minimum of 0.005 inch. Gauge by eye.

(5) *Adjustment of springs.* (*a*) *General.* Use the 505A spring adjuster for adjusting the thin springs and the 507A spring adjuster for the thicker springs. To adjust the position of springs to meet contact separation, stud gap, and contact make requirements, adjust the spring tangs resting against the spoolhead. To do this, hold the spring with one 507A spring adjuster placed above the spring tang and adjust the tang to the right or left as required with another 507A adjuster.

(b) Adjustment for spring tension.

1. Spring tensions are specified in figure 64 on a minimum basis. They have, however, in the case of moving springs (springs which do not rest against the spoolhead), a direct bearing on the electrical performance of the relay. If they are greatly in excess of the specified minimum, the relay may fail to meet its electrical requirements, in which case the tension will have to be reduced. In readjusting, it is desirable to have as much tension in the moving springs as is consistent with meeting the other requirements. Attempt to distribute the tension of the moving springs proportionately between the top and bottom spring combinations.

2. If a spring is excessively bowed or bent, or if there is not a noticeable clearance between the springs, straighten the spring before adjusting to meet the spring tension requirements. To straighten a spring, span it with the slotted end of the proper spring adjuster just back of the bow or bend and while exerting pressure to the right or left, as required, draw the spring adjuster forward the length of the bow. Repeat this operation as required until the spring is approximately straight. Take care when making this adjustment to avoid tilting the spring to either side.

3. To adjust a spring for tension, span it with the slotted end of the proper spring adjuster just back of the stud and slide the adjuster to the base of the spring. Adjust the spring by applying, at the handle end of the tool, slight sidewise pressure to the right or left as required, thus tending to bend the spring at its base. Do not disturb adjacent springs, and avoid twisting the spring.

4. If the desired tension cannot be obtained by adjusting as outlined in *3* above, without bowing the spring too much, apply the proper spring adjuster to the spring just back of the stud and slide it back to the base of the spring. Draw the adjuster forward the length of the spring, meanwhile applying pressure as required so that the spring is formed into a slight gradual bow with its concave surface facing the armature. Then move the adjuster to the base of the spring and adjust as covered in *3* above. The magnitude of the bow to be formed in the spring must be learned by experience and should be such that when the final tension adjustment is made at the base, the spring will be approximately straight.

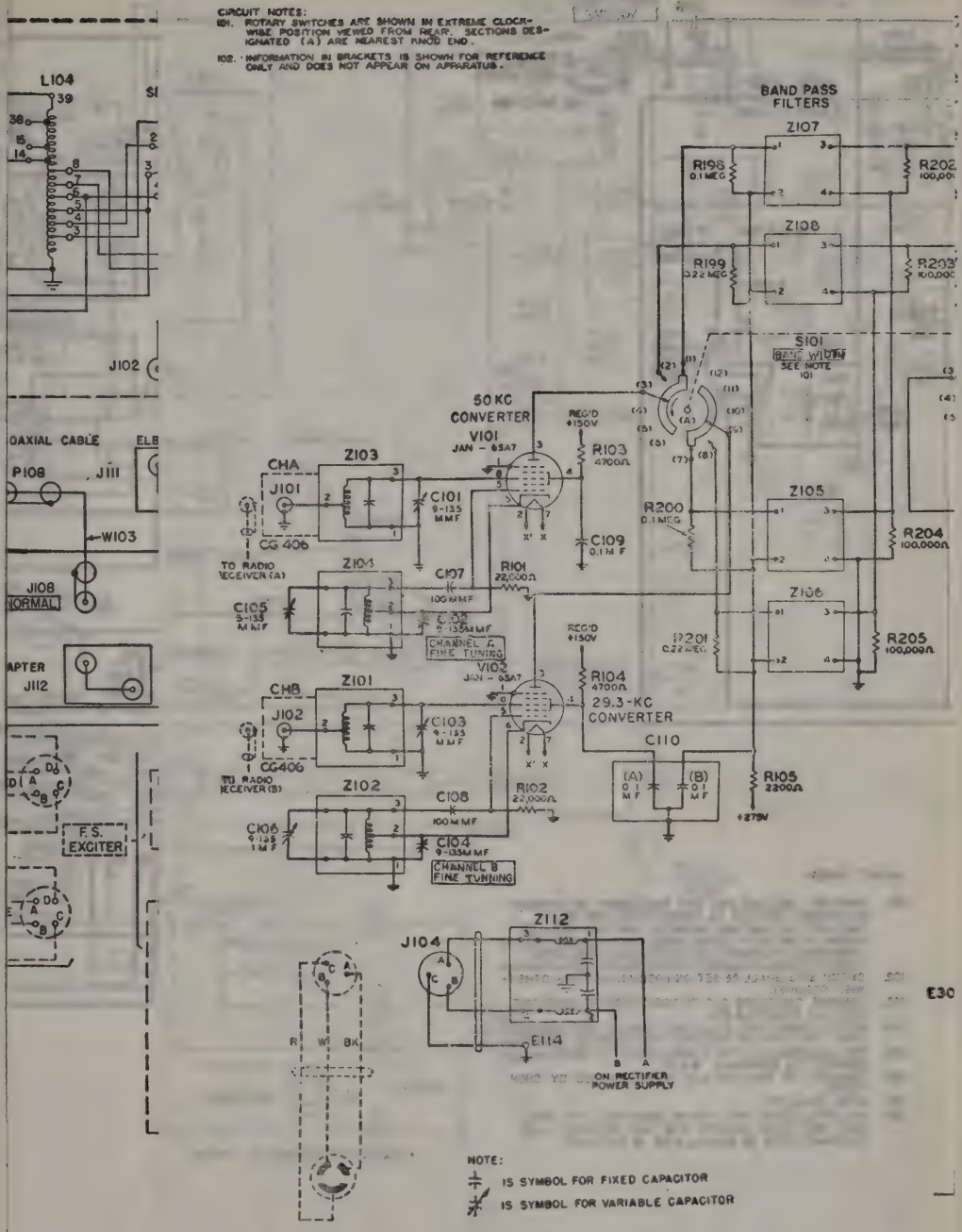

E30

Schematic diagra

64) should be a minimum of 0.006 inch. Stud gaps labeled "S" should have a slight clearance.

(3) *Contact make.* (*a*) Both contacts on the forked springs should make with their associated contacts when the relay is in the electrically operated position for normally open contacts, and in the unoperated position for normally closed contacts.

(*b*) All normally open contacts should make when the relay armature is electrically operated against a 132A (0.008 in.) gauge placed between the armature and the core. The requirements are met if at least one of the two contacts of the forked springs close or make.

Note. Stud gaps (*c*(2) above) insure that normally closed contacts close before the armature reaches the end of its travel when the relay releases.

(4) *Contact separation.* The minimum separation between each pair of contacts normally open, or between each pair of contacts that are opened when the relay is *electrically* operated, shall be a minimum of 0.005 inch. Gauge by eye.

(5) *Adjustment of springs.* (*a*) *General.* Use the 505A spring adjuster for adjusting the thin springs and the 507A spring adjuster for the thicker springs. To adjust the position of springs to meet contact separation, stud gap, and contact make requirements, adjust the spring tangs resting against the spoolhead. To do this, hold the spring with one 507A spring adjuster placed above the spring tang and adjust the tang to the right or left as required with another 507A adjuster.

(b) Adjustment for spring tension.

1. Spring tensions are specified in figure 64 on a minimum basis. They have, however, in the case of moving springs (springs which do not rest against the spoolhead), a direct bearing on the electrical performance of the relay. If they are greatly in excess of the specified minimum, the relay may fail to meet its electrical requirements, in which case the tension will have to be reduced. In readjusting, it is desirable to have as much tension in the moving springs as is consistent with meeting the other requirements. Attempt to distribute the tension of the moving springs proportionately between the top and bottom spring combinations.

2. If a spring is excessively bowed or bent, or if there is not a noticeable clearance between the springs, straighten the spring before adjusting to meet the spring tension requirements. To straighten a spring, span it with the slotted end of the proper spring adjuster just back of the bow or bend and while exerting pressure to the right or left, as required, draw the spring adjuster forward the length of the bow. Repeat this operation as required until the spring is approximately straight. Take care when making this adjustment to avoid tilting the spring to either side.

3. To adjust a spring for tension, span it with the slotted end of the proper spring adjuster just back of the stud and slide the adjuster to the base of the spring. Adjust the spring by applying, at the handle end of the tool, slight sidewise pressure to the right or left as required, thus tending to bend the spring at its base. Do not disturb adjacent springs, and avoid twisting the spring.

4. If the desired tension cannot be obtained by adjusting as outlined in *3* above, without bowing the spring too much, apply the proper spring adjuster to the spring just back of the stud and slide it back to the base of the spring. Draw the adjuster forward the length of the spring, meanwhile applying pressure as required so that the spring is formed into a slight gradual bow with its concave surface facing the armature. Then move the adjuster to the base of the spring and adjust as covered in *3* above. The magnitude of the bow to be formed in the spring must be learned by experience and should be such that when the final tension adjustment is made at the base, the spring will be approximately straight.

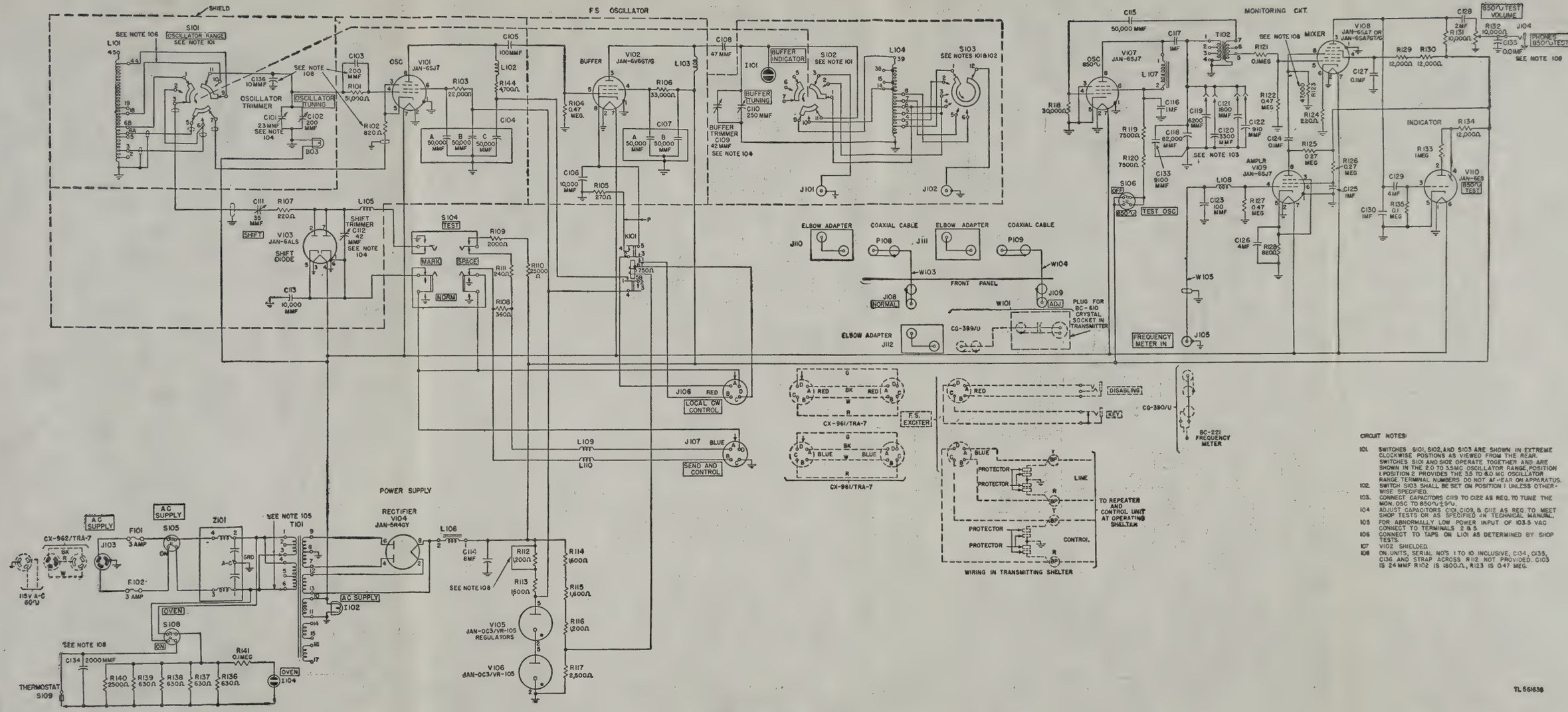

Figure 65. Frequency Shift Exciter O–39/TRA–7, schematic diagram.

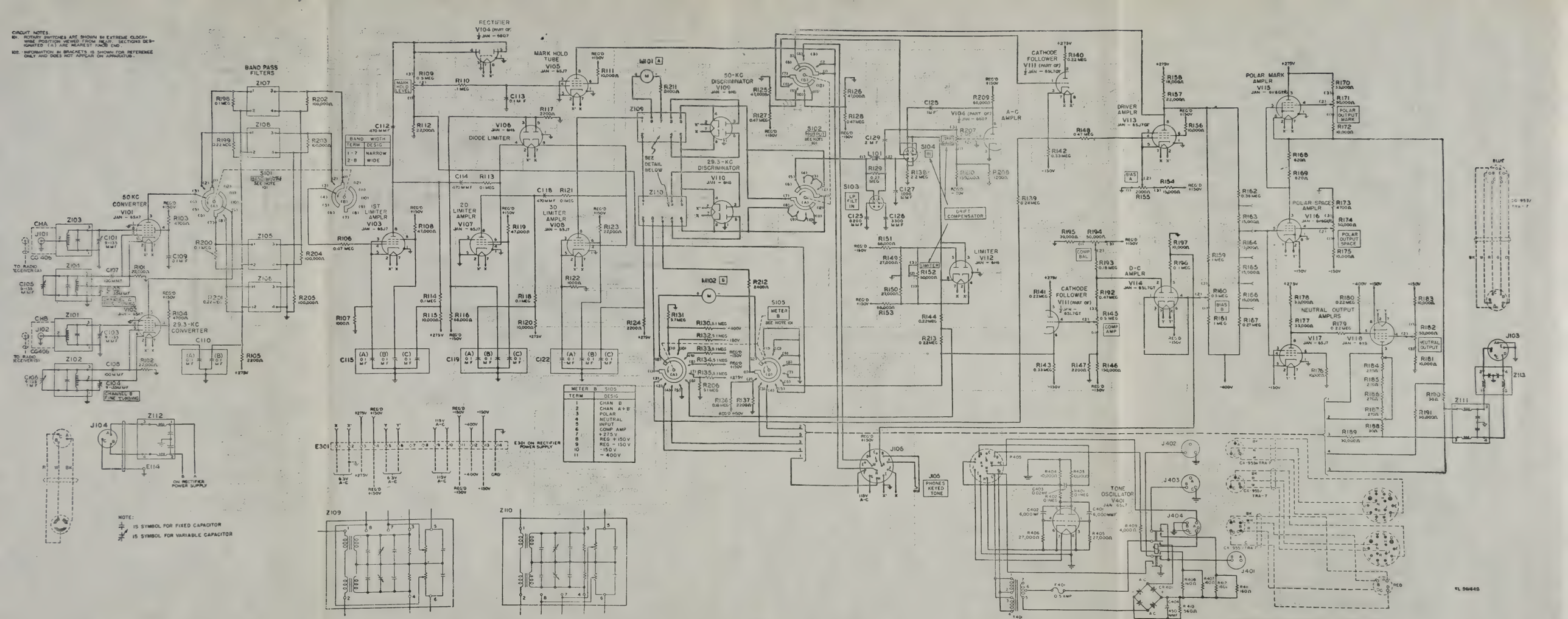

Figure 66. Dual Diversity Converter CV–13/TRA–7, schematic diagram.

(c) Adjustment for pressure of armature against adjusting nut. If the armature is not held against the adjusting nut with the pressure specified in figure 64, increase the tension of the A springs which are tensioned against the armature as outlined in (*b*) *3*, above. Take care in making this adjustment that the pressure of the top A spring is approximately equal to that of the bottom A (or A and D) spring. To check this, check the armature unoperated and place the tip of the 70D gauge against the spring nearest the armature. Read the tension when a clearance is noticeable between the stud and the armature.

(6) *Electrical check.* (*a*) The electrical requirements for relays K101 and K401 are as follows:

Relay	Check for	Readjust (ma)	Test (ma)
K101	Operate	14.4	15.5
	Release	4.9	4.6
K401	Operate	18	19
	Release	4.1	3.9

(*b*) Use Test Set I–181, if available, to apply the above current values to the relay. If a test set is not available, connect a d-c milliammeter and a variable resistance in series with the winding of the relay and a dry cell battery (about 15 volts). Adjust the current to the operate value and the relay should operate. Reduce the current to the release value and the relay should release.

(*c*) If the relay fails to meet the test current requirements, adjust it. Always make the relay meet the readjust current requirements, if any adjustments are changed.

(*d*) If the relay fails to meet the operate requirement after the mechanical adjustments *c* (1) to (6) above) have been made, decrease the tension of the moving springs toward the minimum. If the relay still does not operate, increase the stud gaps. If the relay fails to meet the release requirement, increase the tension of the moving springs. In all cases, however, keep the tensions within the requirements given in figure 64.

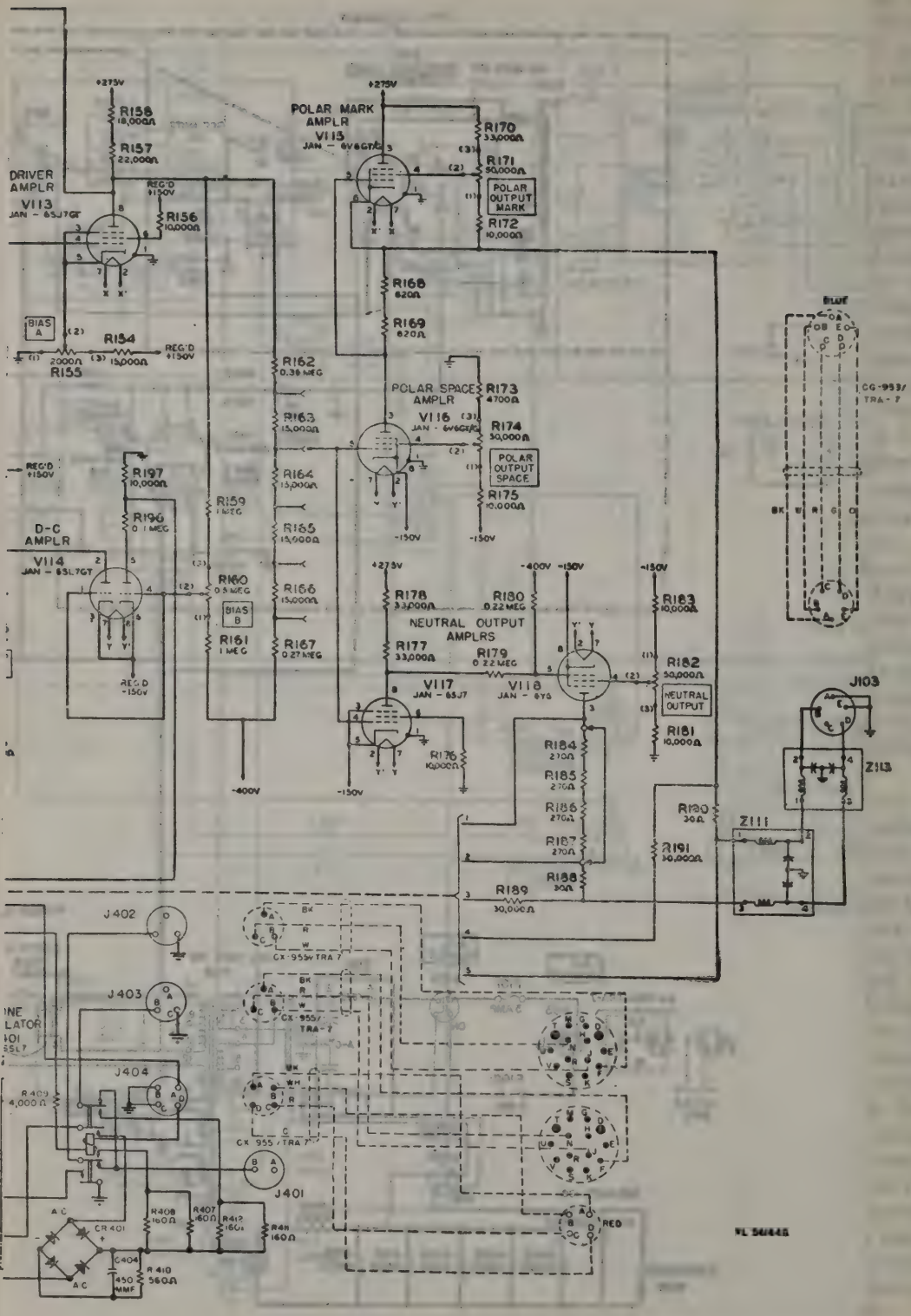

DRIVER AMPLR
V113
JAN - 6SJ7GT
R158 18,000Ω
R157 22,000Ω
R156 10,000Ω
REG'D +150V
BIAS A
R154 15,000Ω
R155 2000Ω
POLAR MARK AMPLR
V115
JAN - 6V6GT/G
R170 33,000Ω
R171 50,000Ω
POLAR OUTPUT MARK
R172 10,000Ω
R168 620Ω
R169 620Ω
POLAR SPACE AMPLR
V116
JAN - 6V6GT/G
R173 4700Ω
R174 50,000Ω
POLAR OUTPUT SPACE
R175 10,000Ω
R162 0.36 MEG
R163 15,000Ω
R164 15,000Ω
R165 15,000Ω
R166 15,000Ω
R167 0.27 MEG
R159 1 MEG
R160 0.5 MEG
BIAS B
R161 1 MEG
R197 10,000Ω
R196 0.1 MEG
D-C AMPLR
V114
JAN - 6SL7GT
REG'D -150V
R178 33,000Ω
R177 33,000Ω
NEUTRAL OUTPUT AMPLRS
V117
JAN - 6SJ7
R176 10,000Ω
R180 0.22 MEG
R179 0.22 MEG
V118
JAN - 6Y6
R183 10,000Ω
R182 50,000Ω
NEUTRAL OUTPUT
R181 10,000Ω
R184 270Ω
R185 270Ω
R186 270Ω
R187 270Ω
R188 30Ω
R189 30,000Ω
R190 30Ω
R191 30,000Ω
Z111
J103
Z113
CG-953/TRA-7
BLUE
J402
J403
J404
J401
CX-955/TRA 7
R409 4,000Ω
CR401
C404 450 MMF
R408 160Ω
R407 160Ω
R412 160Ω
R411 160Ω
R410 560Ω
RED

(c) Adjustment for pressure of armature against adjusting nut. If the armature is not held against the adjusting nut with the pressure specified in figure 64, increase the tension of the A springs which are tensioned against the armature as outlined in (*b*) *3*, above. Take care in making this adjustment that the pressure of the top A spring is approximately equal to that of the bottom A (or A and D) spring. To check this, check the armature unoperated and place the tip of the 70D gauge against the spring nearest the armature. Read the tension when a clearance is noticeable between the stud and the armature.

(6) *Electrical check.* (*a*) The electrical requirements for relays K101 and K401 are as follows:

Relay	Check for	Readjust (ma)	Test (ma)
K101	Operate	14.4	15.5
	Release	4.9	4.6
K401	Operate	18	19
	Release	4.1	3.9

(*b*) Use Test Set I–181, if available, to apply the above current values to the relay. If a test set is not available, connect a d-c milliammeter and a variable resistance in series with the winding of the relay and a dry cell battery (about 15 volts). Adjust the current to the operate value and the relay should operate. Reduce the current to the release value and the relay should release.

(*c*) If the relay fails to meet the test current requirements, adjust it. Always make the relay meet the readjust current requirements, if any adjustments are changed.

(*d*) If the relay fails to meet the operate requirement after the mechanical adjustments *c* (1) to (6) above) have been made, decrease the tension of the moving springs toward the minimum. If the relay still does not operate, increase the stud gaps. If the relay fails to meet the release requirement, increase the tension of the moving springs. In all cases, however, keep the tensions within the requirements given in figure 64.

APPENDIX I
REFERENCES

Note. For availability of items listed, check FM 21–6 and Catalog SIG 2. Also see FM 21–6 for applicable Technical Bulletins, Supply Bulletins, and Modification Work Orders.

1. Army Regulations

AR 380–5	Safeguarding Military Information.

2. Supply Publications

SIG 1 and 2	Introduction and Index, WD Catalog.
SIG 3	List of Items for Troop Issue.
SIG 4–1	Allowances of Expendable Supplies for Tactical Organizations.
SIG 4–2	Allowances of Expendable Supplies for Schools, Training Centers, and Boards.
SIG 5	Stock List of All Items.
SIG 6	Sets of Equipment.
SIG 7	Organizational Spare Parts.
SIG 8	Higher Echelon Spare Parts.
SIG 10	Fixed Plant Maintenance Lists.
SB 11–10	Signal Corps Kit and Materials for Moisture- and Fungi-Resistant Treatment.
SB 11–17	Electron Tube Supply and Reference Data.

3. Technical Manuals on Auxiliary Equipment and Test Equipment

TM 11–281	Radio Sets SCR–399–A and SCR–499–A.
TM 11–300	Frequency Meter Sets SCR–211–( ).
TM 11–303	Test Sets I–56–C, –D, –H, and –J.
TM 11–307	Signal Generators I–72–( ).
TM 11–321	Test Set I–56–E.
TM 11–472	Repair and Calibration of Electrical Measuring Instruments.
TM 11–477	Fixed Station Radio Repair and Maintenance (Personnel Training Text).
TM 11–624	Radio Set AN/MRC–2.
TM 11–2613	Voltohmmeter I–166.
TM 11–2626	Test Unit I–176.
TM 11–2627	Tube Tester I–177.

4. Painting, Preserving, and Lubrication

TB SIG 13	Moistureproofing and Fungiproofing Signal Corps Equipment.
TB SIG 69	Lubrication of Ground Signal Equipment.

5. Camouflage

FM 5–20	Camouflage, Basic Principles.

6. Shipping Instructions

U.S. Army spec. No. 100–14A.	Army-Navy General Specification for Packaging and Packing for Overseas Shipment.

7. Decontamination

TM 3–220	Decontamination.

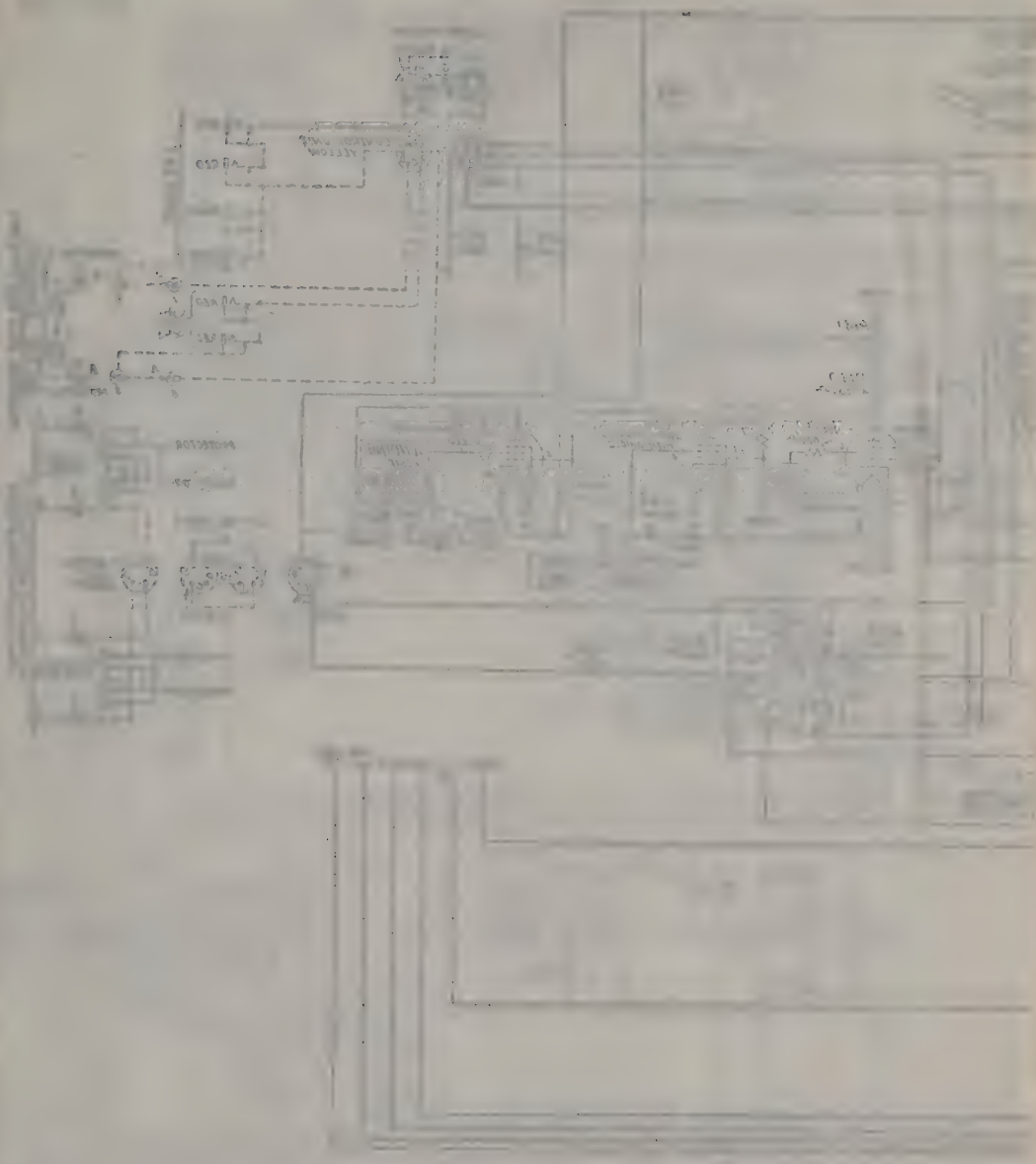

CIRCUIT NOTES:

10. ROTARY SWITCHES (S102) AND (S103) ARE SHOWN IN EXTREME CLOCKWISE POSITION VIEWED FROM REAR. ROTARY SWITCH (S104) IS SHOWN IN THE "NORMAL OPERATION" POSITION. SWITCH SECTIONS DESIGNATED "A" ARE NEAREST THE KNOB END.

20. INFORMATION IN BRACKETS IS SHOWN FOR REFERENCE ONLY AND DOES NOT APPEAR ON THE APPARATUS.

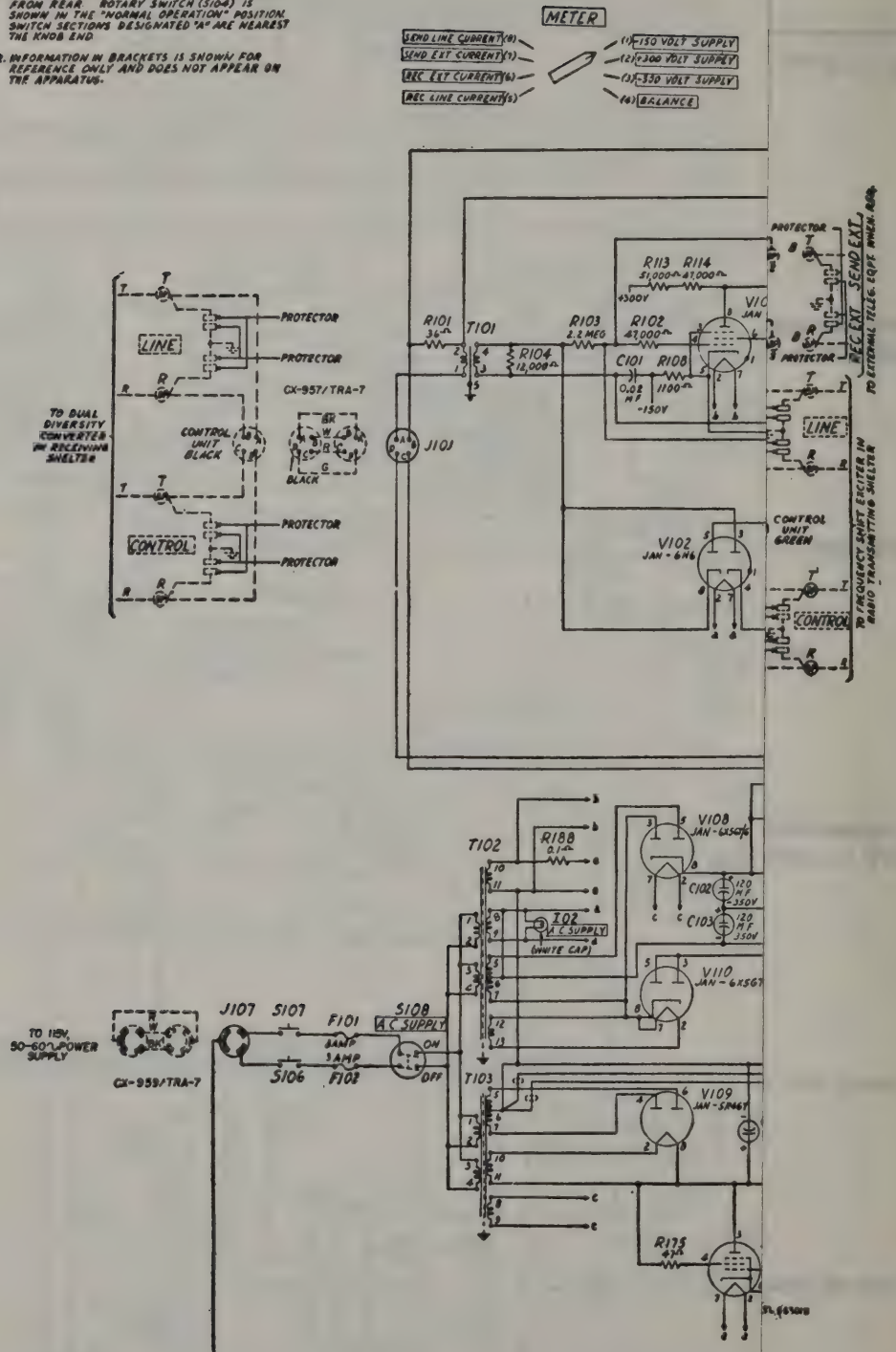

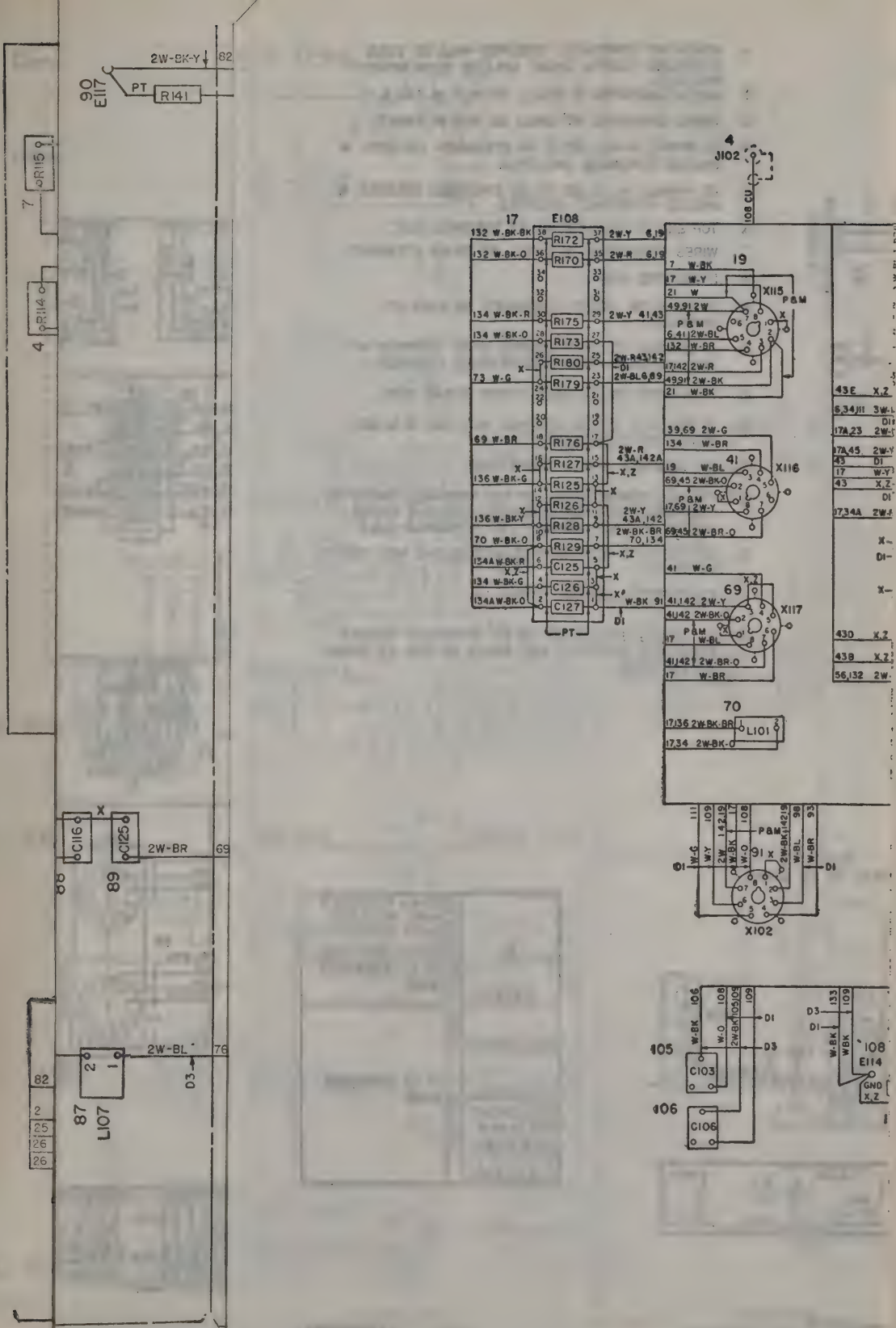

is wiring diagram.

CIRCUIT NOTES:
1. ROTARY SWITCHES (S102) AND (S103) ARE SHOWN IN EXTREME CLOCKWISE POSITION VIEWED FROM REAR. ROTARY SWITCH (S104) IS SHOWN IN THE "NORMAL OPERATION" POSITION. SWITCH SECTIONS DESIGNATED "A" ARE NEAREST THE KNOB END.

FOR INFORMATION IN BRACKETS IS SHOWN FOR REFERENCE ONLY AND DOES NOT APPEAR ON THE APPARATUS.

Figure 67. Control Unit C-292/TRA-7, schematic diagram.

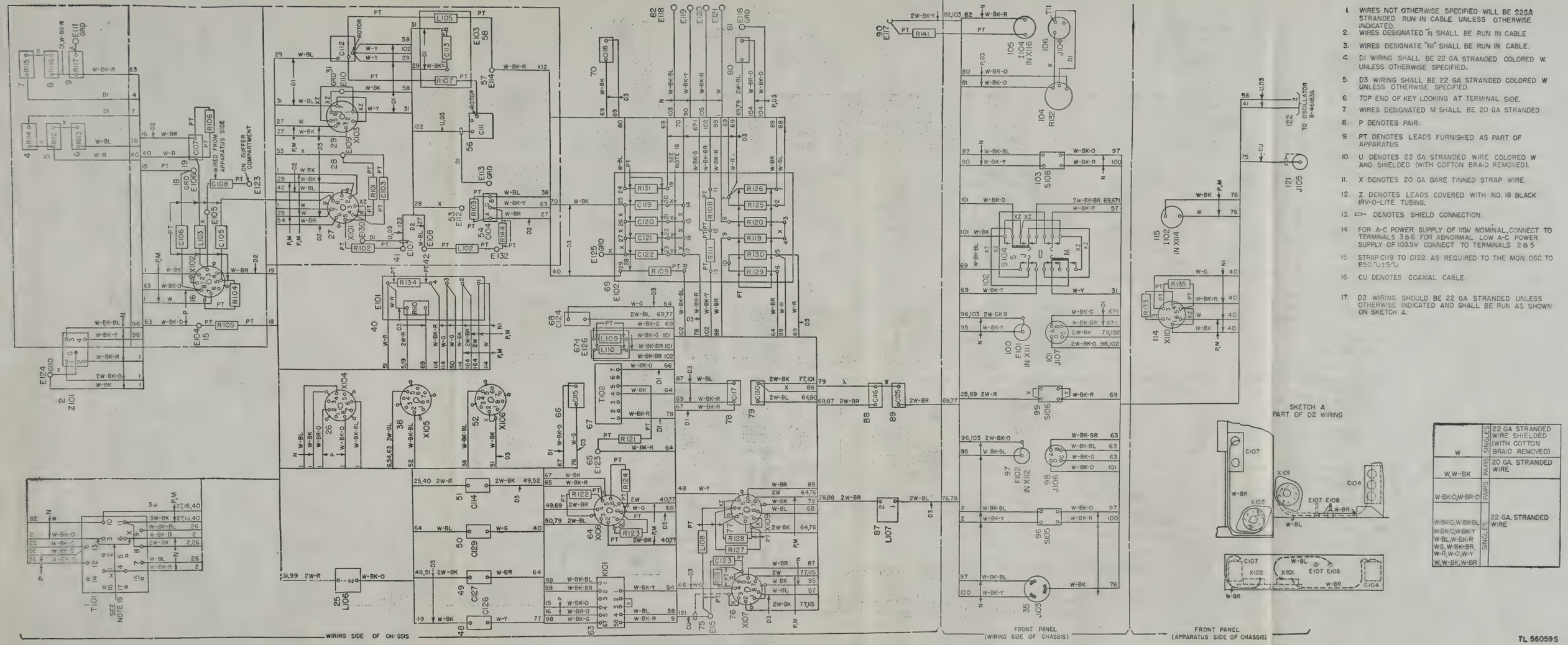

Figure 68. Frequency Shift Exciter O-39/TRA-7, chassis wiring diagram.

NOTES:

1. ALL WIRING, UNLESS OTHERWISE SPECIFIED, SHALL BE 22 GA STRANDED WIRE RUN IN CABLE.
2. "PT" DENOTES LEADS FURNISHED AS PART OF APPARATUS.
3. "X" DENOTES BARE TINNED STRAP WIRE.
4. "Z" DENOTES LEADS SHALL BE COVERED WITH NO 18 BLACK IRV-O-LITE XTE-30 TUBING. THIS TUBING SHALL BE SPACED AT LEAST 1/8" FROM OTHER SOCKET TERMINALS.
5. "D1" WIRING SHALL BE W, 22 GA. STRANDED UNLESS OTHERWISE SPECIFIED. RUN DIRECTLY FROM TERMINAL TO TERMINAL IN THE SHORTEST POSSIBLE MANNER WITH SUFFICIENT SLACK TO PREVENT BREAKING UNDER VIBRATION.
6. "D3" WIRING SHALL BE W, 22 GA. STRANDED UNLESS OTHERWISE SPECIFIED. RUN LOOSE AND DRESS BACK AGAINST THE PANEL IN THE MOST CONVENIENT MANNER.
7. ALL STRAPS SHALL BE RUN AS SHORT AND DIRECT AS POSSIBLE.
8. "P" DENOTES PAIR.
9. "CU" DENOTES COAXIAL SHIELDED CABLE SUPPLIED WITH ASSEMBLY.
10. ○--- DENOTES COAXIAL SHIELD CONNECTION.
11. "M" DENOTES 20 GA. STRANDED WIRE.
12. "U" DENOTES 22 GA. STRANDED WIRE, SHIELDED.
13. ⊂⊃--- DENOTES SHIELD CONNECTION.
14. "D2" WIRING TO BE 22 GAUGE, STRANDED, COLORED WHITE AND RUN IN PATH AND LOCATION AS SHOWN IN FIG. A.

W-G		NO 22 GA STRANDED WIRE, SHIELDED
W-BK-R W-BR-R	PAIRS	NO. 20 GA. STRANDED WIRE
W W-BK	PAIRS	
W-BK-O W-BR-O	PAIRS	
W-BK-O W-BR-O	PAIRS	NO. 22 GA. STRANDED WIRE
W	SINGLES	
W-BR-O	SINGLES	
W-BK-BL	SINGLES	
W-BK-R	SINGLES	
W-BK-Y	SINGLES	
W-BK-G	SINGLES	
W-BK-O	SINGLES	
W-BK-BR	SINGLES	
W-G	SINGLES	
W-BL	SINGLES	
W-Y	SINGLES	
W-BR	SINGLES	
W-BK	SINGLES	
W-R	SINGLES	

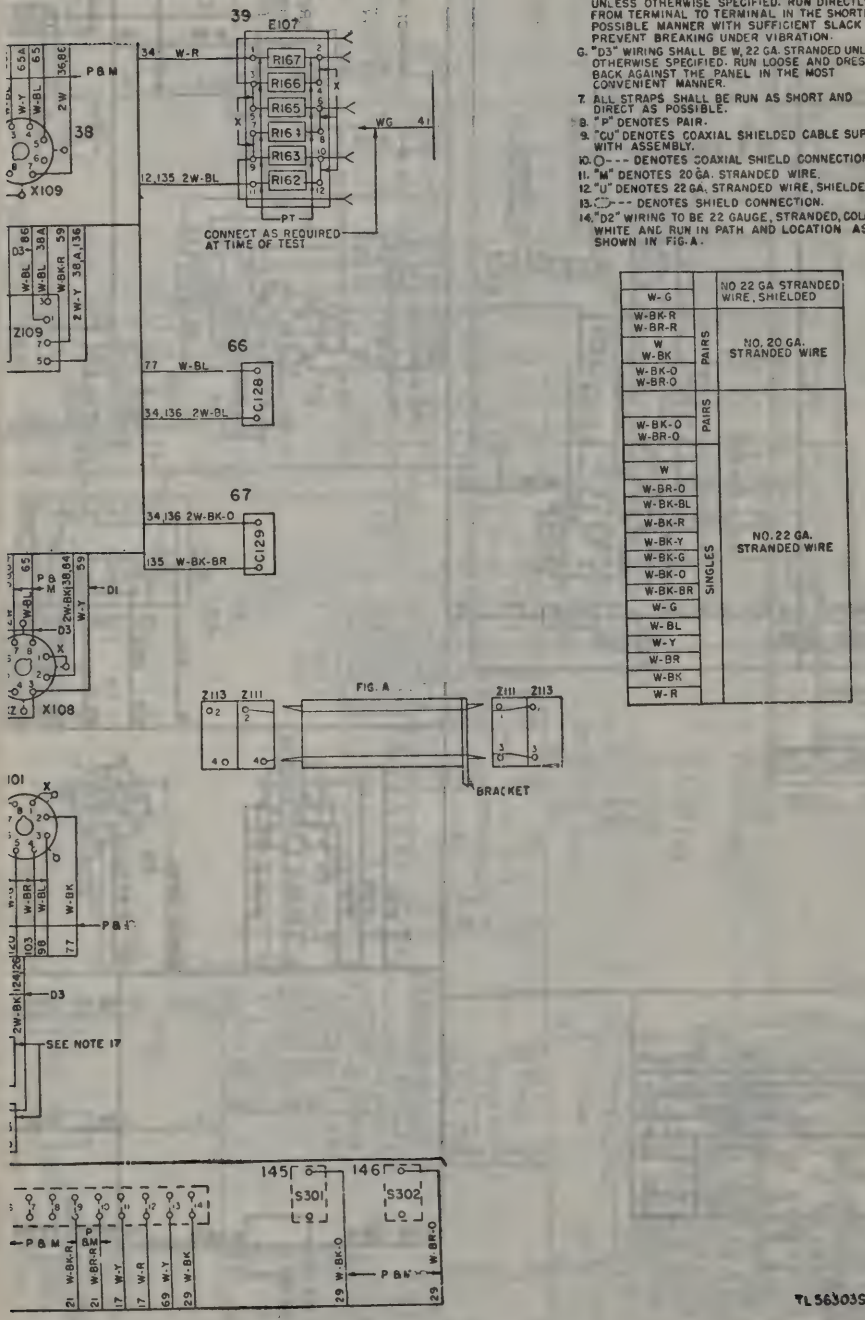

TL 56303S

8. Demolition

FM 5–25	Explosives and Demolitions.

9. Other Publications

FM 24–18	Radio Communication.
FM 72–20	Jungle Warfare.
TB SIG 4	Methods for Improving the Effectiveness of Jungle Radio Communication.
TB SIG 5	Defense Against Radio Jamming.
TB SIG 25	Preventive Maintenance of Power Cords.
TB SIG 66	Winter Maintenance of Signal Equipment.
TB SIG 72	Tropical Maintenance of Ground Signal Equipment.
TB SIG 75	Desert Maintenance of Ground Signal Equipment.
TB SIG 123	Preventive Maintenance Practices for Ground Signal Equipment.
TB SIG 178	Preventive Maintenance Guide for Radio Communication Equipment.
TM 1–455	Electrical Fundamentals.
TM 11–310	Schematic Diagrams for Maintenance of Ground Radio Communications Sets.
TM 11–314	Antennas and Antenna Systems.
TM 11–453	Shop Work.
TM 11–455	Radio Fundamentals.
TM 11–483	Suppression of Radio Noises.
TM 11–486	Electrical Communication Systems Engineering.
TM 11–4000	Trouble Shooting and Repair of Radio Equipment.
TM 37–250	Basic Maintenance Manual.

10. Forms

WD AGO Form 468 (Unsatisfactory Equipment Report).
Army Air Forces Form 54 (Unsatisfactory Report).

11. Abbreviations

a-c	alternating current
a-v-c	automatic volume control
bfo	beat-frequency oscillator
c-w	continuous wave
d-c	direct-current
fs	frequency shift
h-f	high-frequency
i-f	intermediate-frequency
kc	kilocycles
l-f	low-frequency
mc	megacycles
mf	microfarad
m-v-c	manual volume control
r-f	radio-frequency
v	volts

12. Glossary

See glossary in TM 11–455.

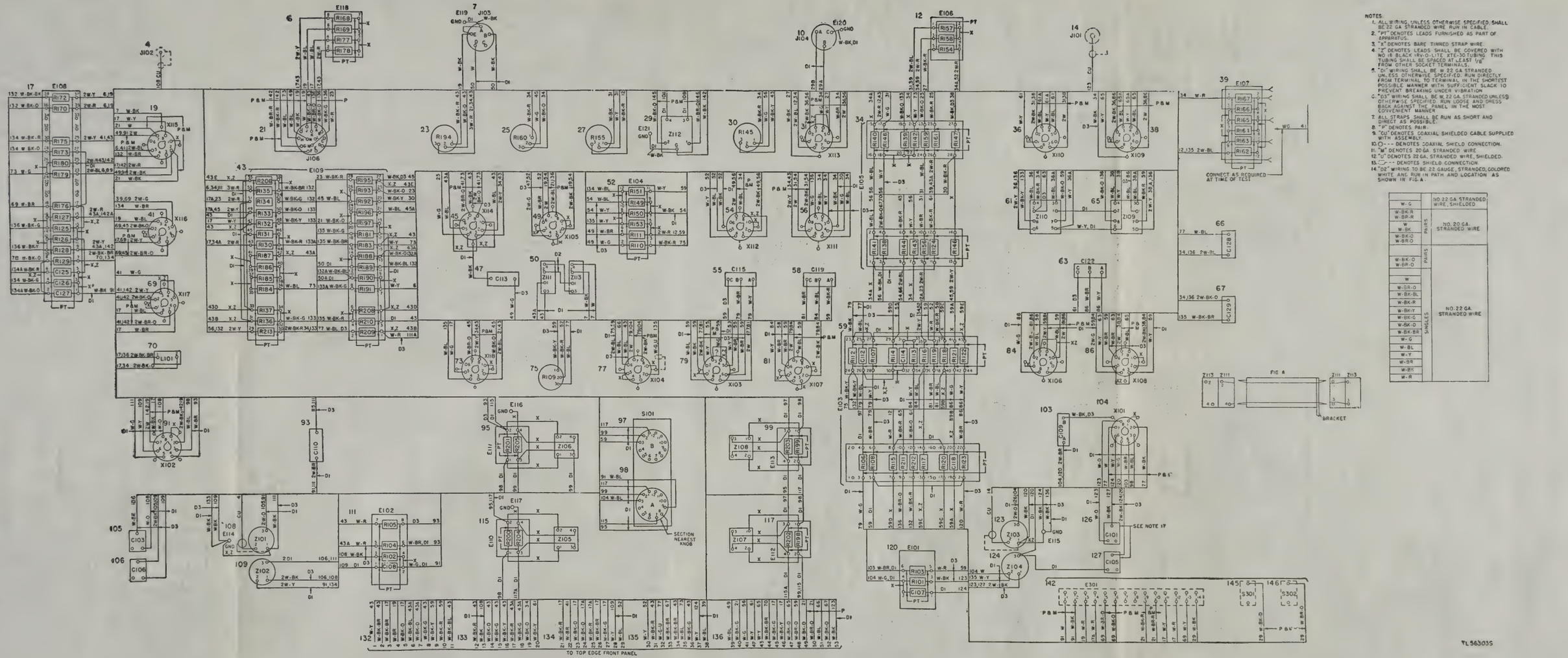

Figure 69. Dual Diversity Converter CV–81/TRA–7, basic main unit chassis, wiring diagram.

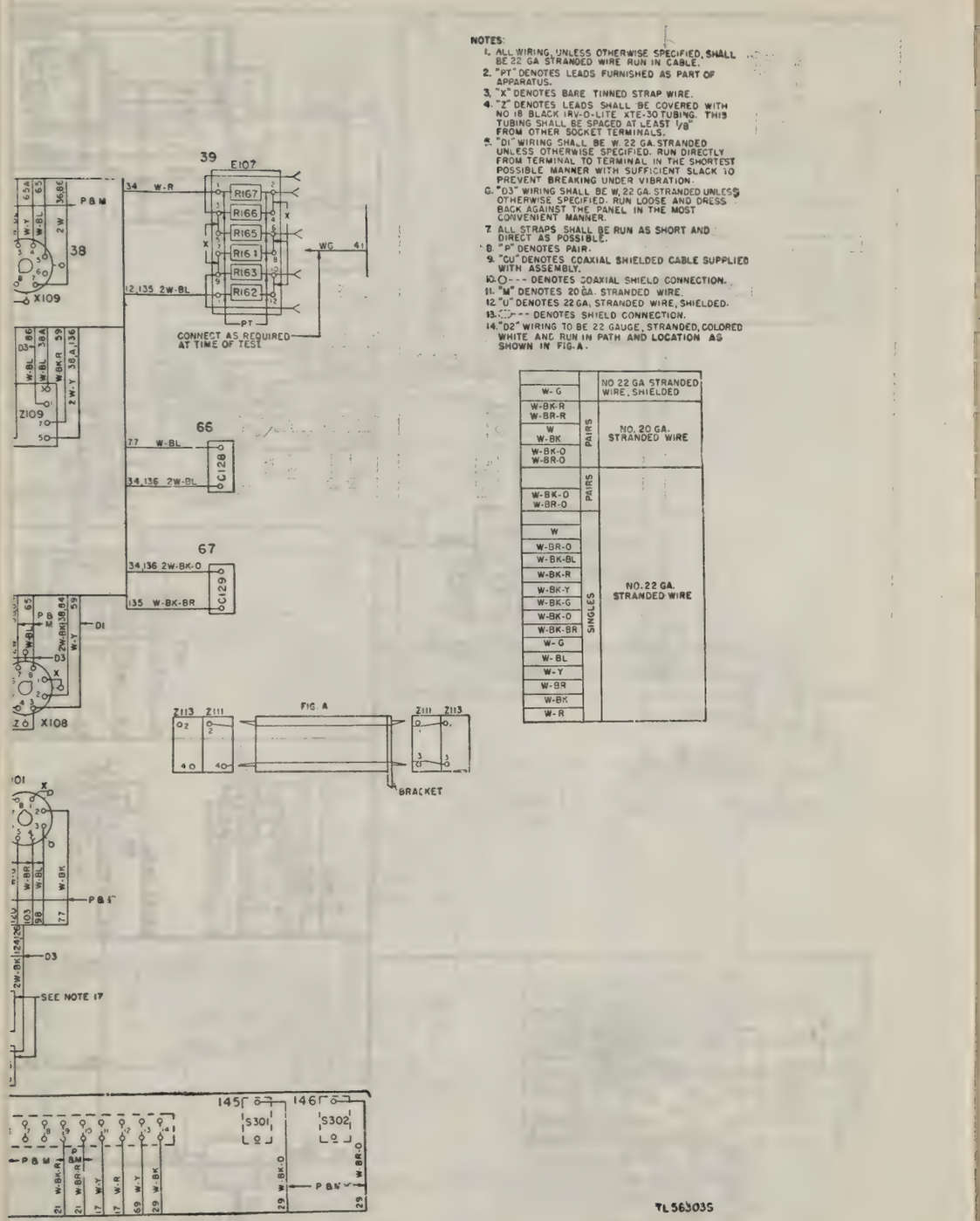

8. Demolition

FM 5–25	Explosives and Demolitions.

9. Other Publications

FM 24–18	Radio Communication.
FM 72–20	Jungle Warfare.
TB SIG 4	Methods for Improving the Effectiveness of Jungle Radio Communication.
TB SIG 5	Defense Against Radio Jamming.
TB SIG 25	Preventive Maintenance of Power Cords.
TB SIG 66	Winter Maintenance of Signal Equipment.
TB SIG 72	Tropical Maintenance of Ground Signal Equipment.
TB SIG 75	Desert Maintenance of Ground Signal Equipment.
TB SIG 123	Preventive Maintenance Practices for Ground Signal Equipment.
TB SIG 178	Preventive Maintenance Guide for Radio Communication Equipment.
TM 1–455	Electrical Fundamentals.
TM 11–310	Schematic Diagrams for Maintenance of Ground Radio Communications Sets.
TM 11–314	Antennas and Antenna Systems.
TM 11–453	Shop Work.
TM 11–455	Radio Fundamentals.
TM 11–483	Suppression of Radio Noises.
TM 11–486	Electrical Communication Systems Engineering.
TM 11–4000	Trouble Shooting and Repair of Radio Equipment.
TM 37–250	Basic Maintenance Manual.

10. Forms

WD AGO Form 468 (Unsatisfactory Equipment Report).
Army Air Forces Form 54 (Unsatisfactory Report).

11. Abbreviations

a-c	alternating current
a-v-c	automatic volume control
bfo	beat-frequency oscillator
c-w	continuous wave
d-c	direct-current
fs	frequency shift
h-f	high-frequency
i-f	intermediate-frequency
kc	kilocycles
l-f	low-frequency
mc	megacycles
mf	microfarad
m-v-c	manual volume control
r-f	radio-frequency
v	volts

12. Glossary

See glossary in TM 11–455.

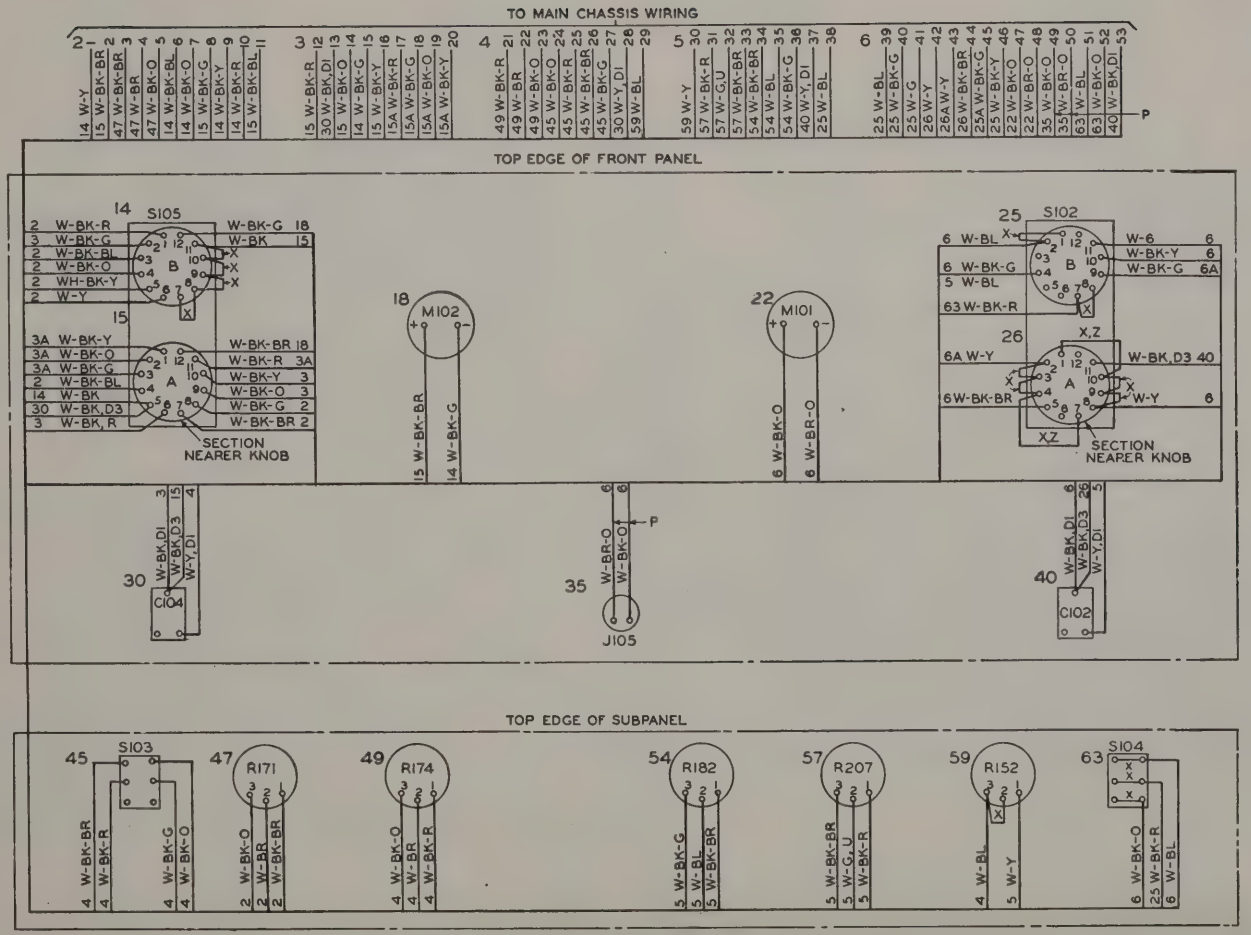

Figure 70. Dual Diversity Converter CV–31/TRA–7, basic unit front and control panels, wiring diagram.

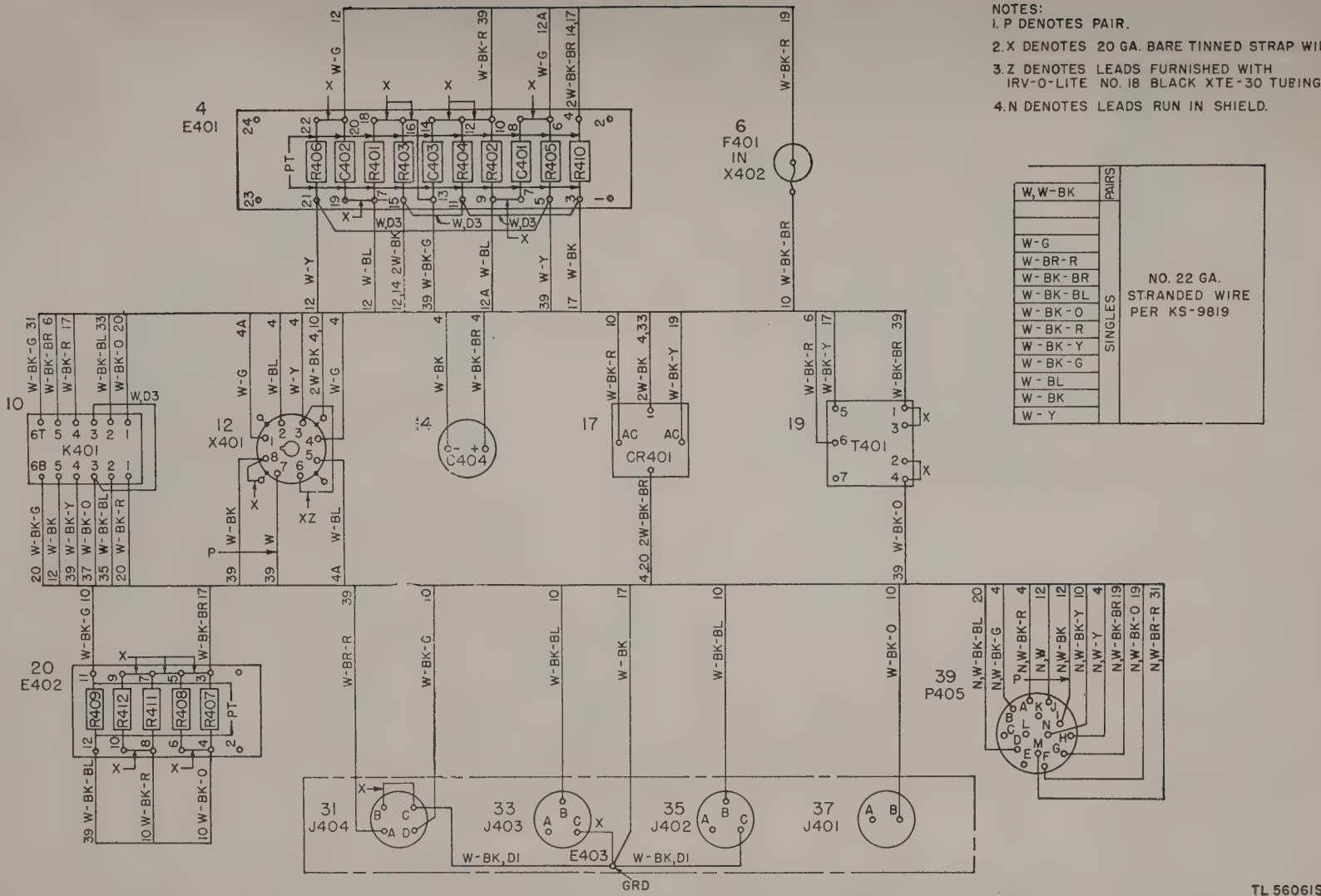

Figure 71. Dual Diversity Converter CV-31/TRA-7, tone oscillator, wiring diagram.

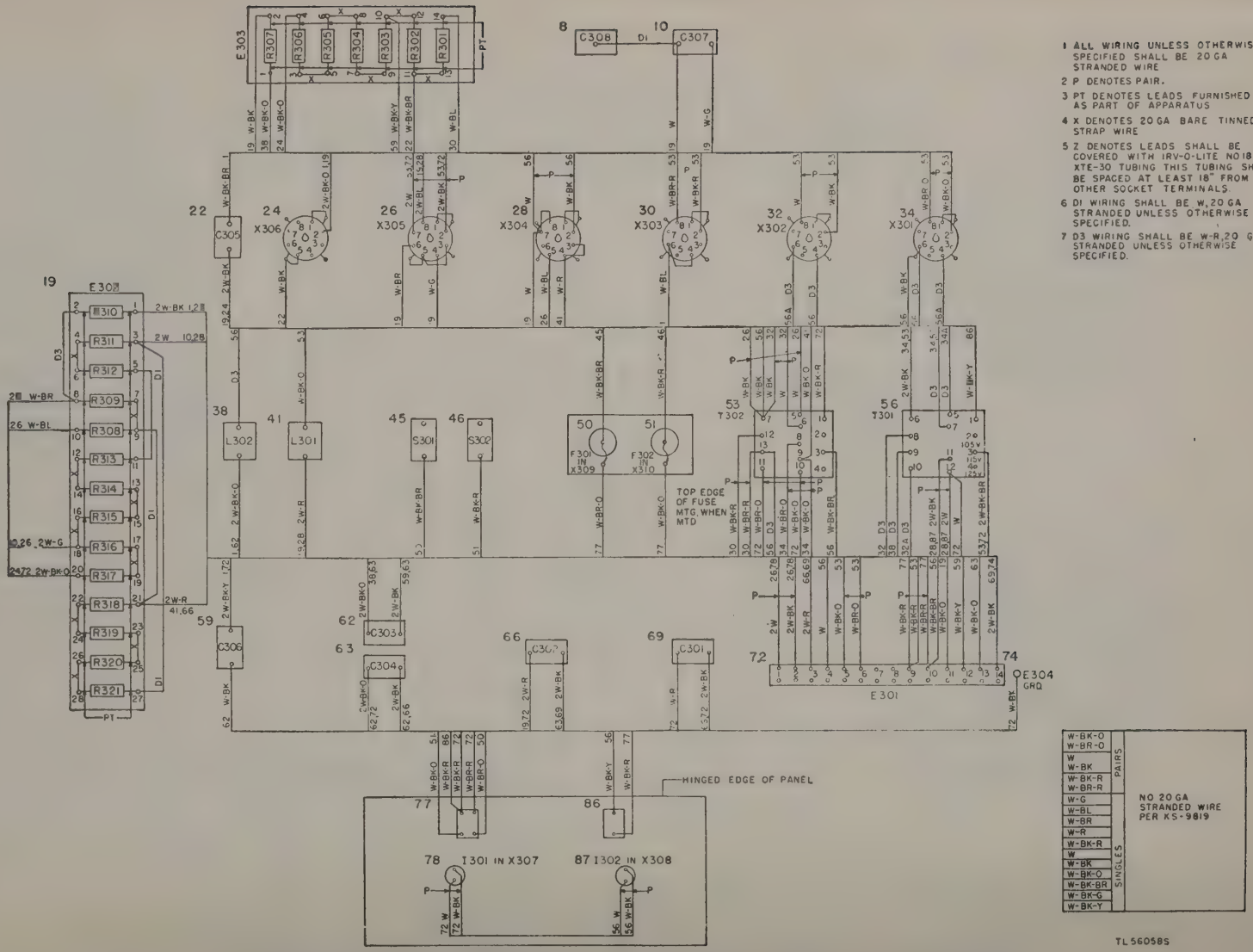

Figure 72. Dual Diversity Converter CV-31/TRA-7, power supply circuit, wiring diagram.

C110
C109
T103
J101
J107
X109
R187
S106
S107
E104
R181
C111
C107
C103
R186
C102
J103
T102
J102
C106
C105
E103
SEE NOTE 13
R175
R176
R180
R179
C108
R182
R183
R184
R185
R188
R173
R165
R163
R162
R168
R169
R171
C104
R167
R166
R174
R177
R178
R164
R170
X113
X112
X115
X116
X110
X108
X111
X114

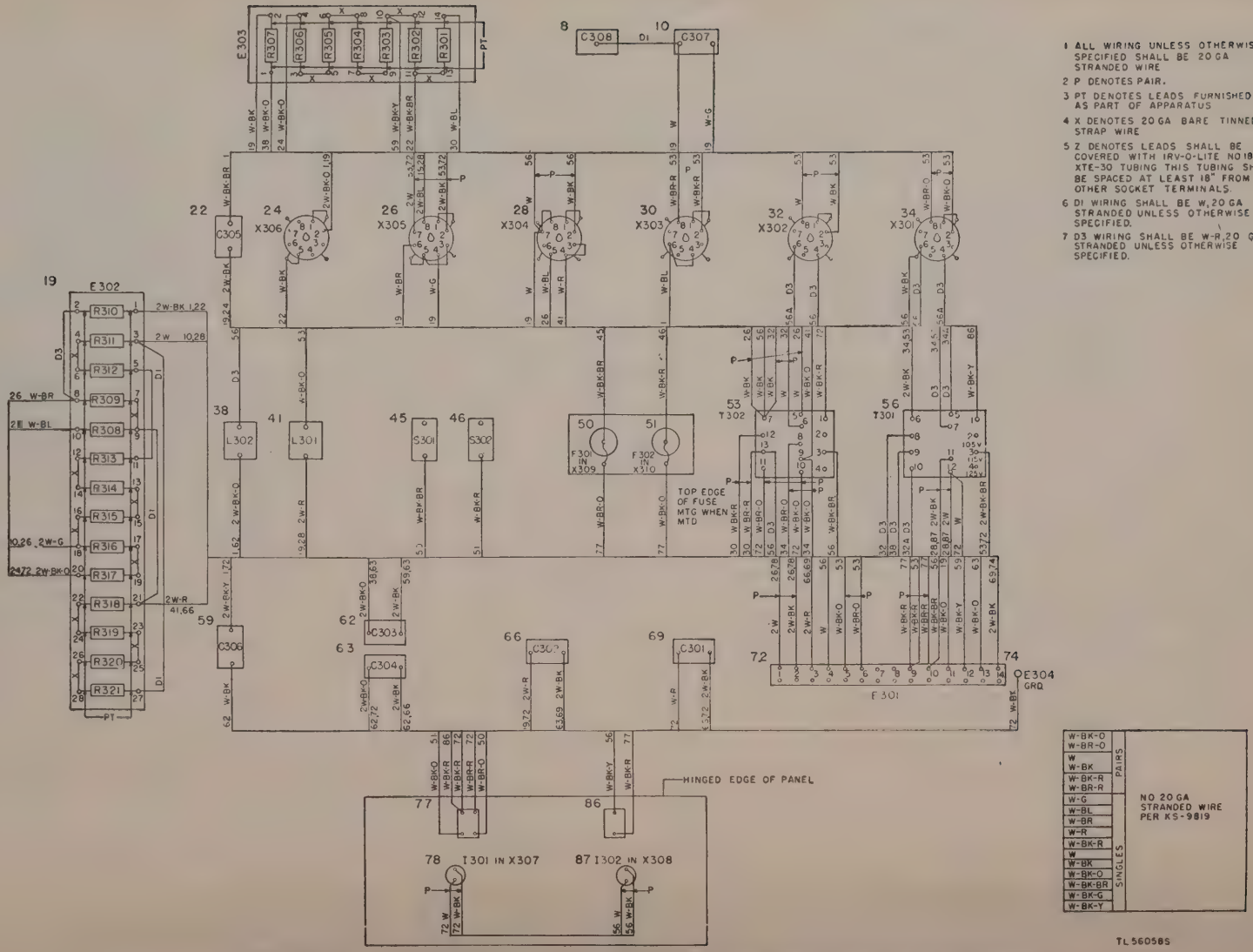

Figure 72. Dual Diversity Converter CV-31/TRA-7, power supply circuit, wiring diagram.

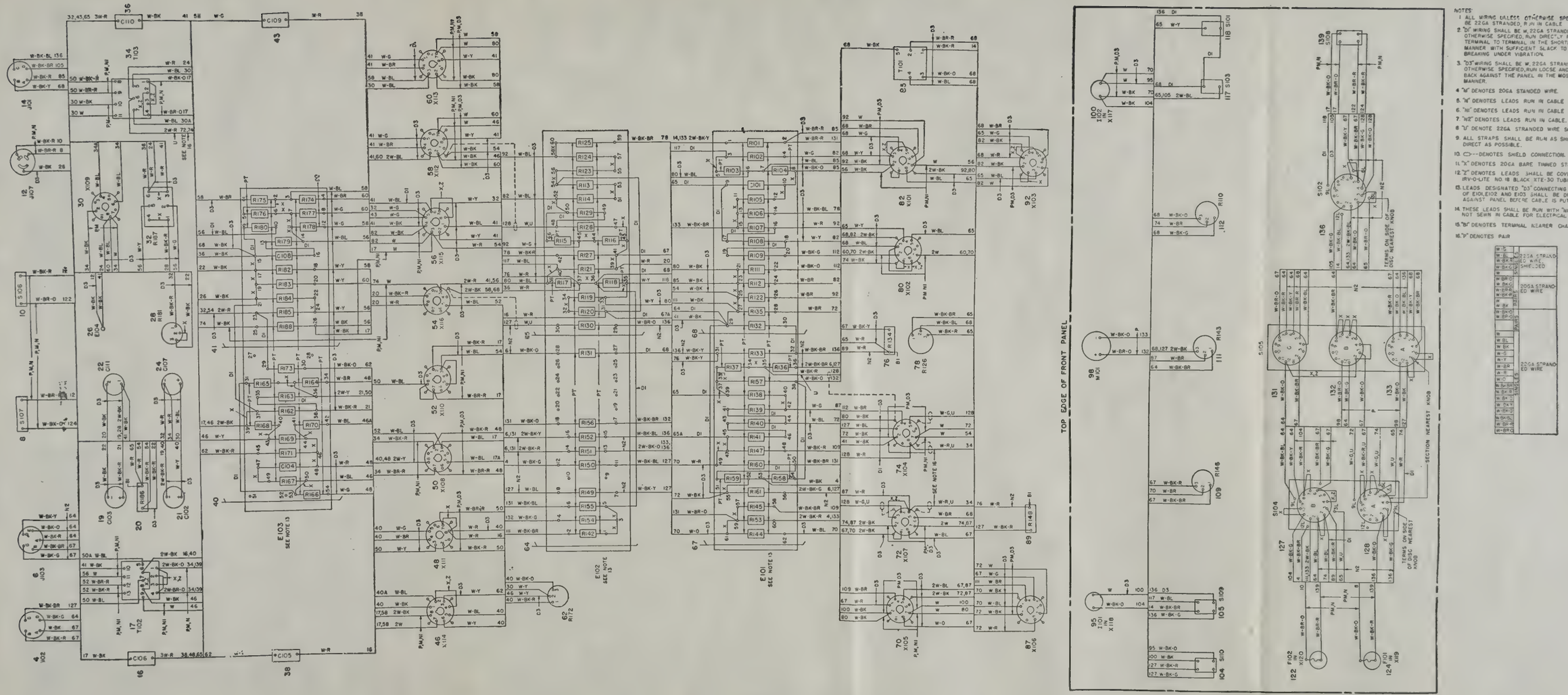

Figure 73. Control Unit C-292/TRA-7, wiring diagram.

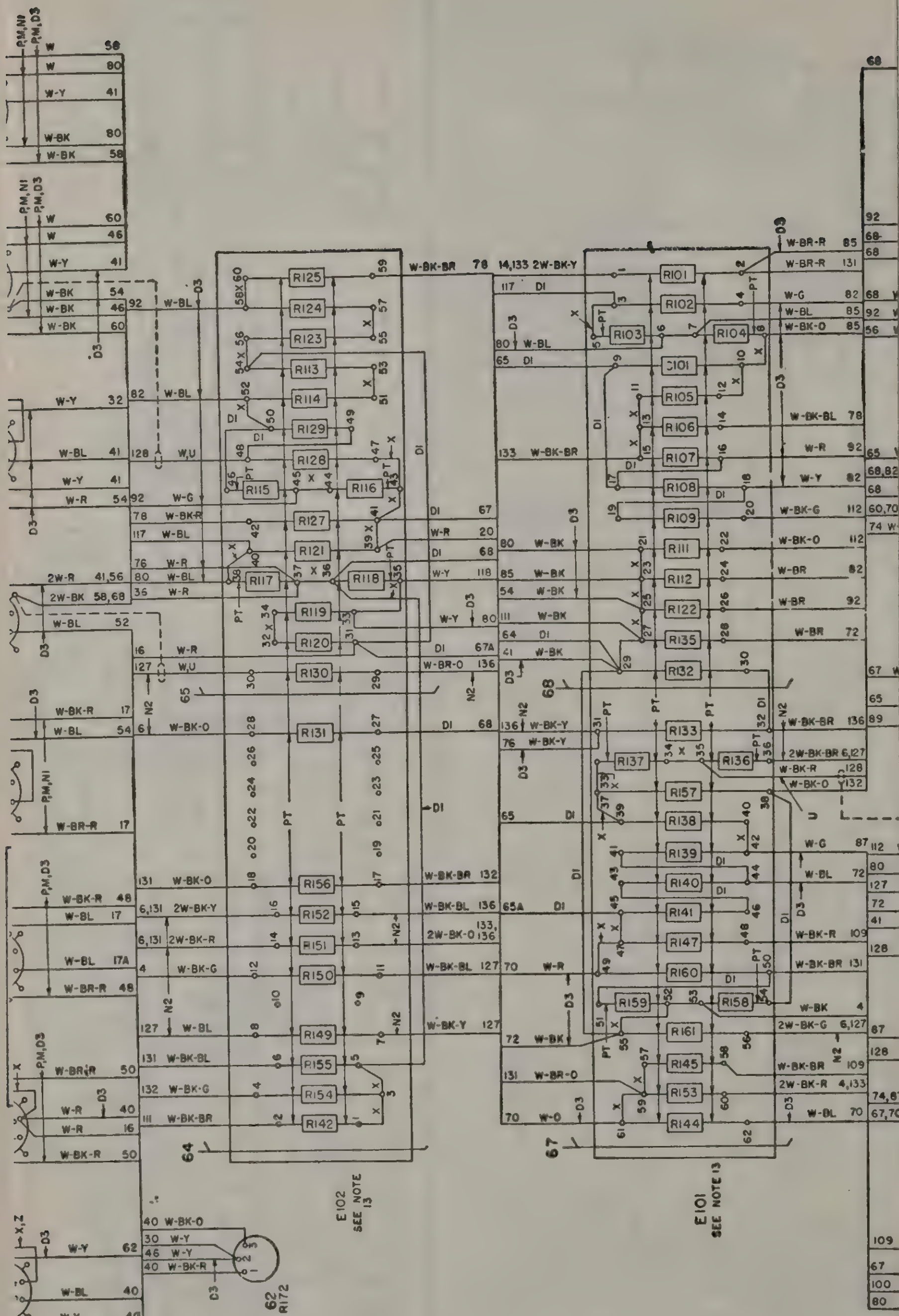

Figure 73. Control Unit C–292/TRA-

APPENDIX II

MAINTENANCE PARTS FOR RADIO TELETYPE EQUIPMENT AN/TRA–7

Maintenance parts for this equipment will be published in the appropriate section of the Signal Supply Catalog. See SIG 1 and 2, Index and Introduction, for availability.

APPENDIX II

MAINTENANCE PARTS FOR RADIO TELETYPE EQUIPMENT AN/TRA–7

Maintenance parts for this equipment will be published in the appropriate section of the Signal Supply Catalog. See SIG 1 and 2, Index and Introduction, for availability.

APPENDIX II

MAINTENANCE PARTS FOR RADIO TELETYPE EQUIPMENT AN/TRA–7

Maintenance parts for this equipment will be published in the appropriate section of the Signal Supply Catalog. See SIG 1 and 2, Index and Introduction, for availability.

CAPACITOR COLOR CODES

RMA 3-DOT COLOR CODE FOR MICA-DIELECTRIC CAPACITORS

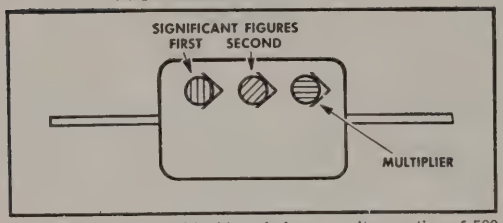

Capacitors marked with this code have a voltage rating of 500 volts.

RMA 6-DOT COLOR CODE FOR MICA-DIELECTRIC CAPACITORS

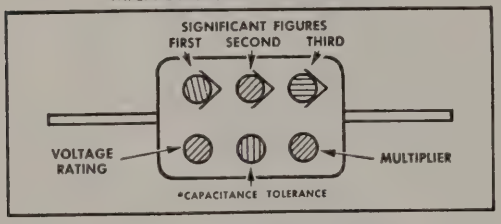

RMA COLOR CODE FOR TUBULAR CERAMIC-DIELECTRIC CAPACITORS

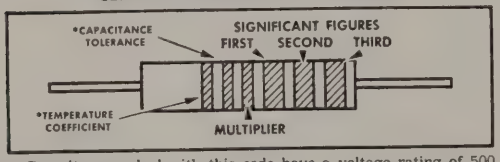

Capacitors marked with this code have a voltage rating of 500 volts.

RMA Radio Manufacturers Association JAN Joint Army-Navy

Note These color codes give all capacitances in micromicrofarads.

*Items marked with an asterisk are of interest primarily to depot and higher echelon repair personnel

JAN 6-DOT COLOR CODE FOR PAPER-DIELECTRIC CAPACITORS

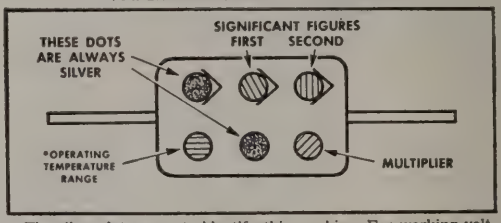

The silver dots serve to identify this marking. For working voltages see JAN type designation code.

JAN 6-DOT COLOR CODE FOR MICA-DIELECTRIC CAPACITORS

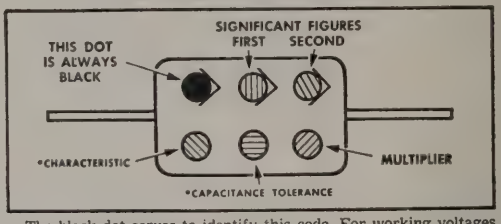

The black dot serves to identify this code. For working voltages see JAN type designation code.

JAN COLOR CODE FOR FIXED CERAMIC-DIELECTRIC CAPACITORS

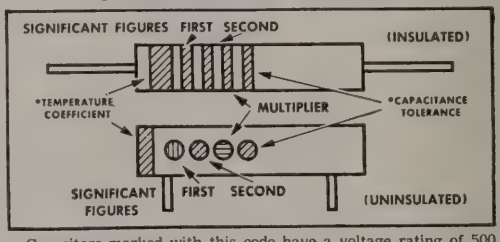

Capacitors marked with this code have a voltage rating of 500 volts. Either the band or dot code may be used.

COLOR	SIGNIFICANT FIGURE	MULTIPLIER			RMA VOLTAGE RATING
		RMA MICA-AND CERAMIC-DIELECTRIC	JAN MICA-AND PAPER-DIELECTRIC	JAN CERAMIC-DIELECTRIC	
BLACK	0	1	1	1	
BROWN	1	10	10	10	100
RED	2	100	100	100	200
ORANGE	3	1,000	1,000	1,000	300
YELLOW	4	10,000			400
GREEN	5	100,000			500
BLUE	6	1,000,000			600
VIOLET	7	10,000,000			700
GRAY	8	100,000,000		0.01	800
WHITE	9	1,000,000,000		0.1	900
GOLD		0.1	0.1		1,000
SILVER		0.01	0.01		2,000
NO COLOR					500

TL 13417 A

858–Ft. Mon.–6-6-45–500

Figure 74. Capacitor color code

RESISTOR COLOR CODES

RMA COLOR CODE FOR FIXED COMPOSITION RESISTORS

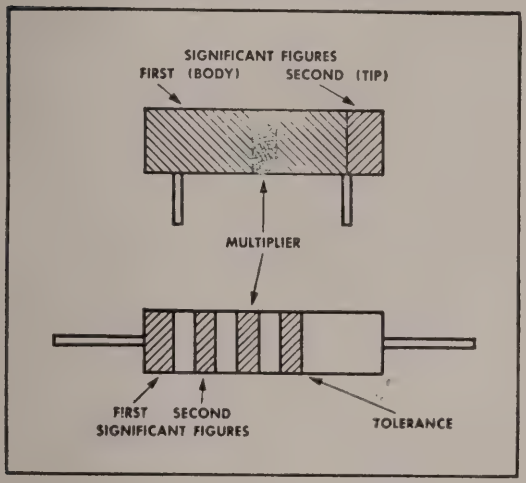

Insulated fixed composition resistors with axial leads are designated by a natural tan background color. Non-insulated fixed composition resistors with axial leads are designated by a black background color.

JAN COLOR CODE FOR FIXED COMPOSITION RESISTORS

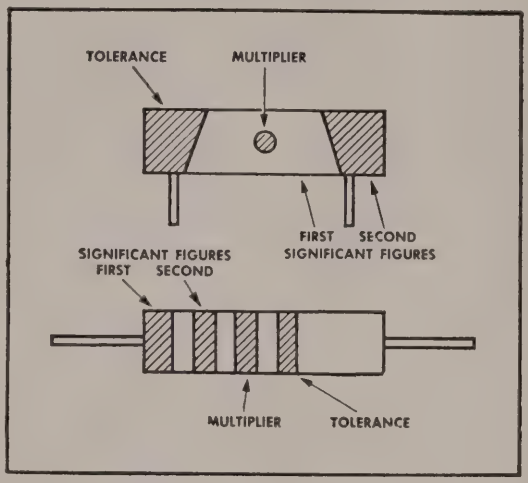

Resistors with axial leads are insulated. Resistors with radial leads are uninsulated.

COLOR	SIGNIFICANT FIGURE	MULTIPLIER	TOLERANCE (PERCENT)
BLACK	0	1	
BROWN	1	10	
RED	2	100	
ORANGE	3	1,000	
YELLOW	4	10,000	
GREEN	5	100,000	
BLUE	6	1,000,000	
VIOLET	7	10,000,000*	
GRAY	8	100,000,000*	
WHITE	9	1,000,000,000*	
GOLD		0.1*	5
SILVER		0.01*	10
NO COLOR			20

*JAN ONLY

Example: A 50,000-ohm resistor with a standard tolerance of 20 percent (no color) would be indicated by a green ring (5), a black ring (0), and an orange ring (000)

RMA: Radio Manufacturers Association
JAN: Joint Army-Navy

TL 12418 A

Figure 75. Resistor color code.

☆ U. S. GOVERNMENT PRINTING OFFICE: 1946—706382